REV.	LERA LESLIE E. ROBERTSON ASSOCIATES CONSULTING STRUCTURAL ENGINEERS	P 1003118	DRAWING NO.
	WTC - STRUCTURAL INTEGRITY INVESTIGATION	DRAFT KEH	IN-T1SW
	TOWER 1 SOUTH WALL INSPECTION GENERAL NOTES	DESIGN	1.2-1
		CHECK	15 JUNE 93

1. NUMBERING SYSTEM:

IN - T1SW - 3.2 - 1.2

- IN → INSPECTION
- T1SW → LOCATION: TOWER 1 SOUTH WALL
- 3.2 → TOPIC; SUB-TOPIC
- 1.2 → PAGE NUMBER; USED ONLY IF DETAIL CONTINUES FOR MORE THAN ONE PAGE

2. ALL WELD SYMBOLS SHOWN IN DRAWINGS & DETAILS PREFIXED WITH "IN-T1SW" REFER TO <u>EXISTING</u> WELDS AS SHOWN IN THE ORIGINAL CONTRACT DOCUMENTS. <u>NO</u> NEW WELDS ARE CALLED FOR IN THESE DRAWINGS.

REV	LERA LESLIE E. ROBERTSON ASSOCIATES CONSULTING STRUCTURAL ENGINEERS	P1003118	DRAWING NO
	WTC - STRUCTURAL INTEGRITY INVESTIGATION	DRAFT	IN-T1SW
		DESIGN	1.3 - 1
	PAGE LISTING & CURRENT DATES	CHECK	23 JUL 93

	IN-T1SW-1.1-1.1	21 JUL 93
	IN-T1SW-1.1-1.2	21 JUL 93
	IN-T1SW-1.2-1	15 JUN 93
*	IN-T1SW-1.3-1	23 JUL 93
	IN-T1SW-2.2-1	15 JUN 93
	IN-T1SW-2.2-2	15 JUN 93
	IN-T1SW-2.2-3	15 JUN 93
	IN-T1SW-2.2-4	15 JUN 93
	IN-T1SW-2.2-5	15 JUN 93
	IN-T1SW-2.2-6	15 JUN 93
	IN-T1SW-2.3-1	15 JUN 93
	IN-T1SW-2.3-2	15 JUN 93
	IN-T1SW-2.3-3.1	24 JUN 93
	IN-T1SW-2.3-3.2	24 JUN 93
	IN-T1SW-2.4-1	17 JUN 93
	IN-T1SW-2.4-2	17 JUN 93
	IN-T1SW-2.4-3	17 JUN 93
	IN-T1SW-3.2-1	15 JUN 93
	IN-T1SW-3.2-2	15 JUN 93
	IN-T1SW-3.2-3	24 JUN 93
	IN-T1SW-3.2-4	24 JUN 93
	IN-T1SW-3.3-1	15 JUN 93
	IN-T1SW-3.3-2	15 JUN 93
	IN-T1SW-3.4-1	15 JUN 93
	IN-T1SW-3.4-2	15 JUN 93
	IN-T1SW-3.4-3	15 JUN 93
	IN-T1SW-3.4-4	15 JUN 93
	IN-T1SW-3.4-5	15 JUN 93
	IN-T1SW-3.4-6	15 JUN 93
	IN-T1SW-3.4-7	21 JUL 93
	IN-T1SW-3.4-8	15 JUN 93
	IN-T1SW-3.4-9	15 JUN 93
	IN-T1SW-3.4-10	15 JUN 93
	IN-T1SW-3.4-11	15 JUN 93
	IN-T1SW-3.4-12	24 JUN 93
	IN-T1SW-3.4-13	24 JUN 93
	IN-T1SW-3.4-14	28 JUN 93
	IN-T1SW-3.4-15	06 JUL 93
	IN-T1SW-3.5-1	28 JUN 93
	IN-T1SW-3.6-1	28 JUN 93
	IN-T1SW-3.6-2	01 JUL 93
	IN-T1SW-3.6-3	15 JUL 93
	IN-T1SW-4.2-1	15 JUN 93
	IN-T1SW-4.2-2	15 JUN 93
	IN-T1SW-4.2-3	15 JUN 93
	IN-T1SW-4.2-4	15 JUN 93
	IN-T1SW-4.2-5	15 JUN 93
	IN-T1SW-4.2-6	06 JUL 93
	IN-T1SW-4.2-7	07 JUL 93
	IN-T1SW-4.3-1	15 JUN 93
	IN-T1SW-4.3-2	15 JUN 93
	IN-T1SW-4.3-3	15 JUN 93
	IN-T1SW-4.3-4	15 JUN 93
	IN-T1SW-4.3-5	15 JUN 93
	IN-T1SW-4.3-6	15 JUN 93
	IN-T1SW-4.3-7	24 JUN 93
	IN-T1SW-4.4-1	24 JUN 93
	IN-T1SW-5.2-1	15 JUN 93
	IN-T1SW-6.2-8.1	21 JUL 93
	IN-T1SW-6.2-8.4	21 JUL 93
	IN-T1SW-6.2-8.5	21 JUL 93
	IN-T1SW-6.2-9.1	21 JUL 93
	IN-T1SW-6.2-10.1	21 JUL 93
	IN-T1SW-6.2-10.2	21 JUL 93
	IN-T1SW-6.2-10.4	21 JUL 93
	IN-T1SW-6.2-10.5	21 JUL 93
	IN-T1SW-6.2-10.6	21 JUL 93
	IN-T1SW-6.2-10.7	21 JUL 93
	IN-T1SW-6.2-25.1	21 JUL 93
	IN-T1SW-6.2-25.2	21 JUL 93
*	IN-T1SW-6.2-25.4	23 JUL 93
	IN-T1SW-6.2-26.1	21 JUL 93
	IN-T1SW-6.2-26.2	21 JUL 93
	IN-T1SW-6.2-26.4	21 JUL 93
	IN-T1SW-6.2-26.5	21 JUL 93
	IN-T1SW-6.2-26.7	21 JUL 93
*	IN-T1SW-6.2-27.2	23 JUL 93
	IN-T1SW-6.4-4.1	21 JUL 93
	IN-T1SW-6.4-4.2	21 JUL 93
	IN-T1SW-6.4-4.3	21 JUL 93
	IN-T1SW-6.4-4.4	21 JUL 93
	IN-T1SW-6.4-4.5	21 JUL 93
	IN-T1SW-6.4-4.6	21 JUL 93
	IN-T1SW-6.4-4.7	21 JUL 93
	IN-T1SW-6.4-5.1	21 JUL 93
	IN-T1SW-6.4-5.2	21 JUL 93
	IN-T1SW-6.4-5.3	21 JUL 93
	IN-T1SW-6.4-10	21 JUL 93
	IN-T1SW-6.6-2	21 JUL 93
	IN-T1SW-6.6-4	21 JUL 93
	IN-T1SW-6.6-6	21 JUL 93
	IN-T1SW-6.6-7	21 JUL 93

REV. | LCMA CONSULTING STRUCTURAL ENGINEERS

WTC - STRUCTURAL INTEGRITY INVESTIGATION	DRAFT KEH	IN-TISW 2.2-1
HARDNESS TESTING COLUMNS	DESIGN	
	CHECK	15 JUNE 93

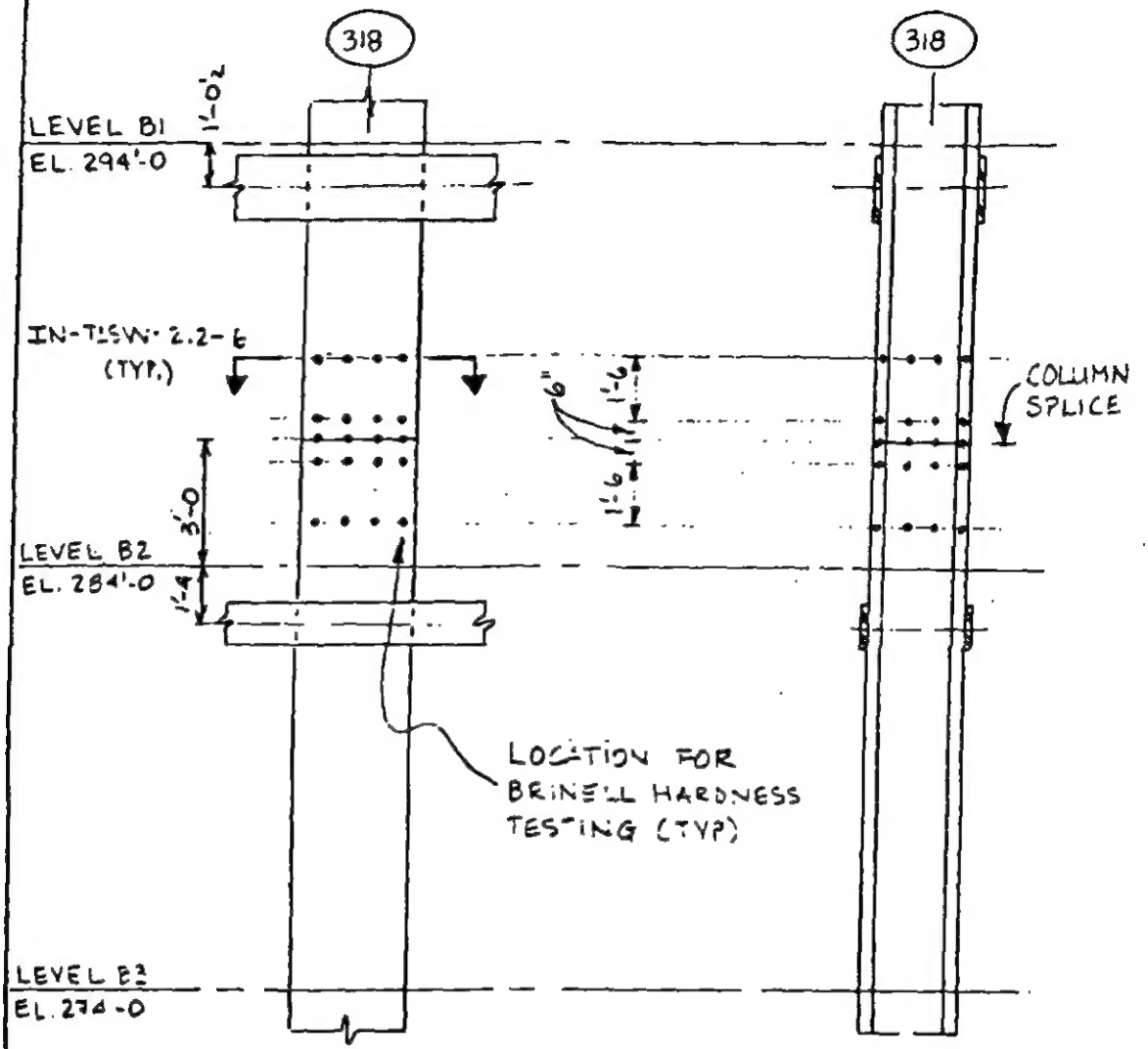

ONFIDENTIAL

REV.	LERA LESLIE E. ROBERTSON ASSOCIATES CONSULTING STRUCTURAL ENGINEERS	P COSTO	DRAWING IN-T15W
	WTC - STRUCTURAL INTEGRITY INVESTIGATION	DRAFT KEH	2.2-2
	HARDNESS TESTING COLUMNS	DESIGN	
		CHECK	15 JUNE 93

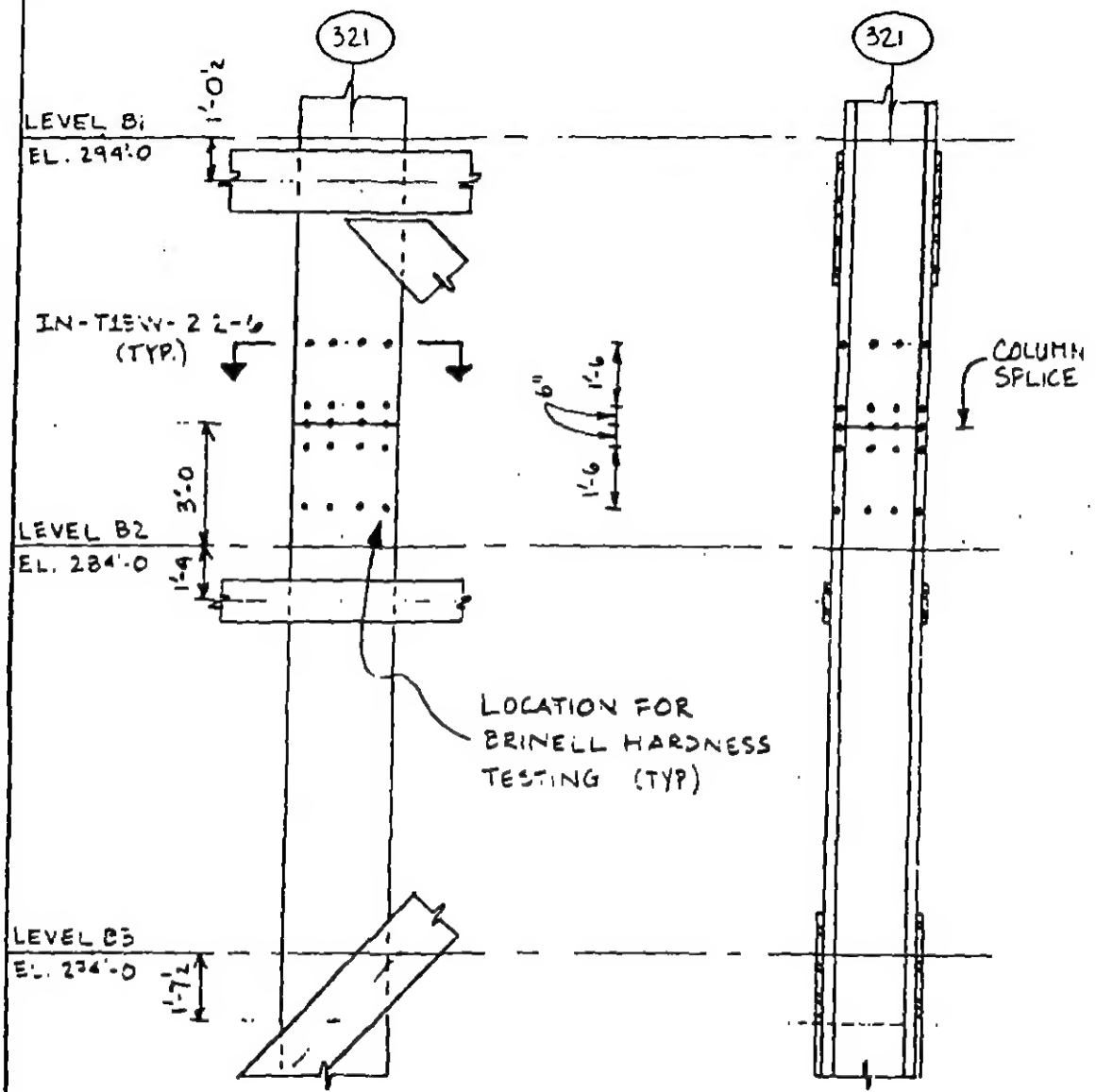

CONFIDENTIAL

EXP 003625

REV.	LERA LESLIE E. ROBERTSON ASSOCIATES CONSULTING STRUCTURAL ENGINEERS	P 003-3	DRAWING NO.
	WTC - STRUCTURAL INTEGRITY INVESTIGATION	DRAFT KEH	IN-TISW 2.2-3
	HARDNESS TESTING COLUMNS	DESIGN	
		CHECK	15 JUNE 93

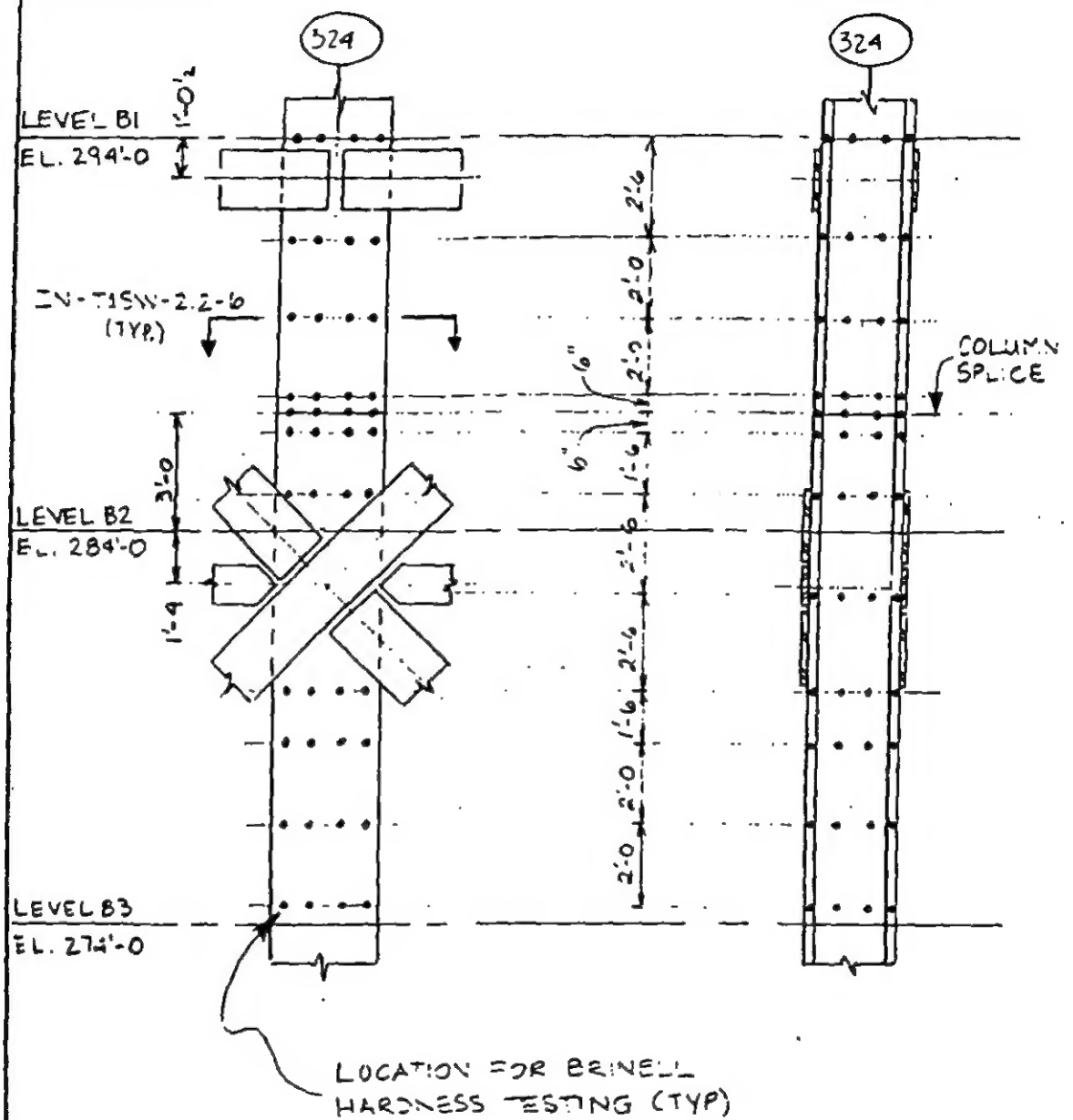

ONFIDENTIAL

REV.	LERA LESLIE E. ROBERTSON ASSOCIATES CONSULTING STRUCTURAL ENGINEERS	P -00318	DRAWING NO.
	WTC - STRUCTURAL INTEGRITY INVESTIGATION	DRAFT KEH	IN-T1SW 2.2-4
	HARDNESS TESTING COLUMNS	DESIGN	
		CHECK	15 JUNE 03

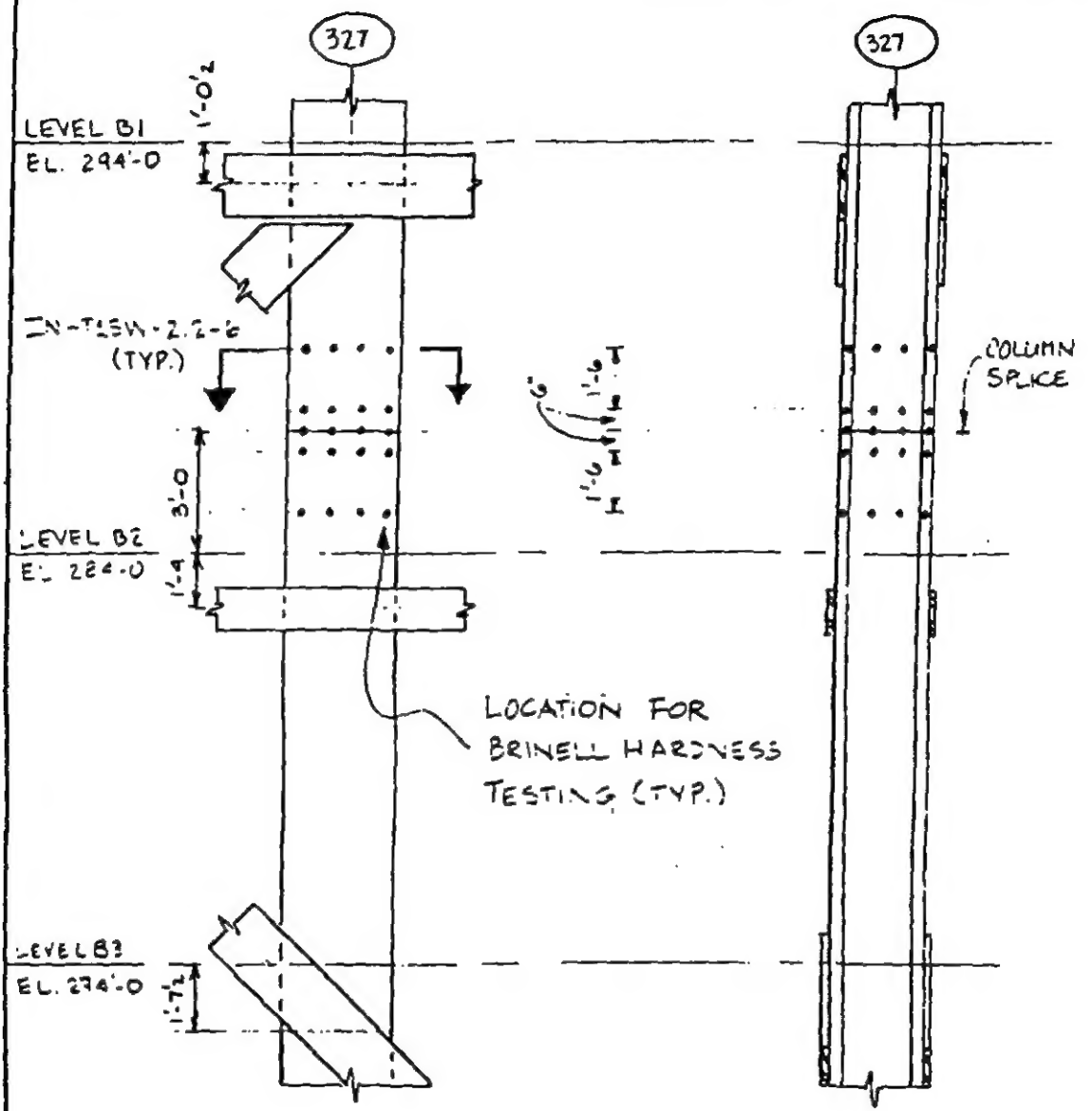

CONFIDENTIAL

REV.	LERA LESLIE E. ROBERTSON ASSOCIATES CONSULTING STRUCTURAL ENGINEERS	P 1CC3115	DRAWING NO.
	WTC - STRUCTURAL INTEGRITY INVESTIGATION	DRAFT KEH	IN-TISN 2.2-5
	HARDNESS TESTING COLUMNS	DESIGN	
		CHECK	15 JUNE 93

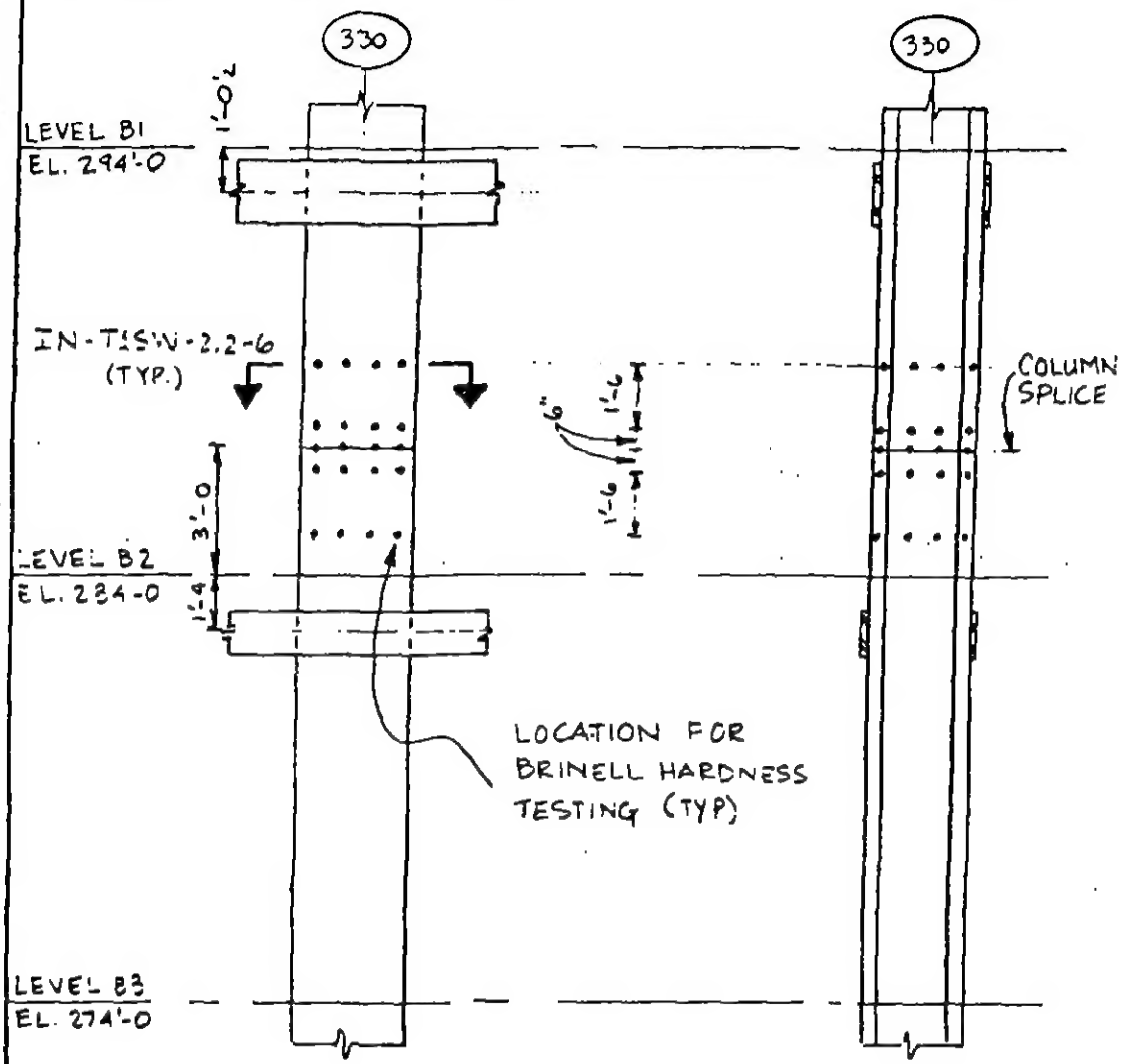

REV.	LERA LESLIE E. ROBERTSON ASSOCIATES CONSULTING STRUCTURAL ENGINEERS	PROJECTS	DRAWING NO.
	WTC - STRUCTURAL INTEGRITY INVESTIGATION	DRAFT KEH	IN-TISN 2.2-6
	HARDNESS TESTING, COLUMNS	DESIGN	
		CHECK	15 JUNE 93

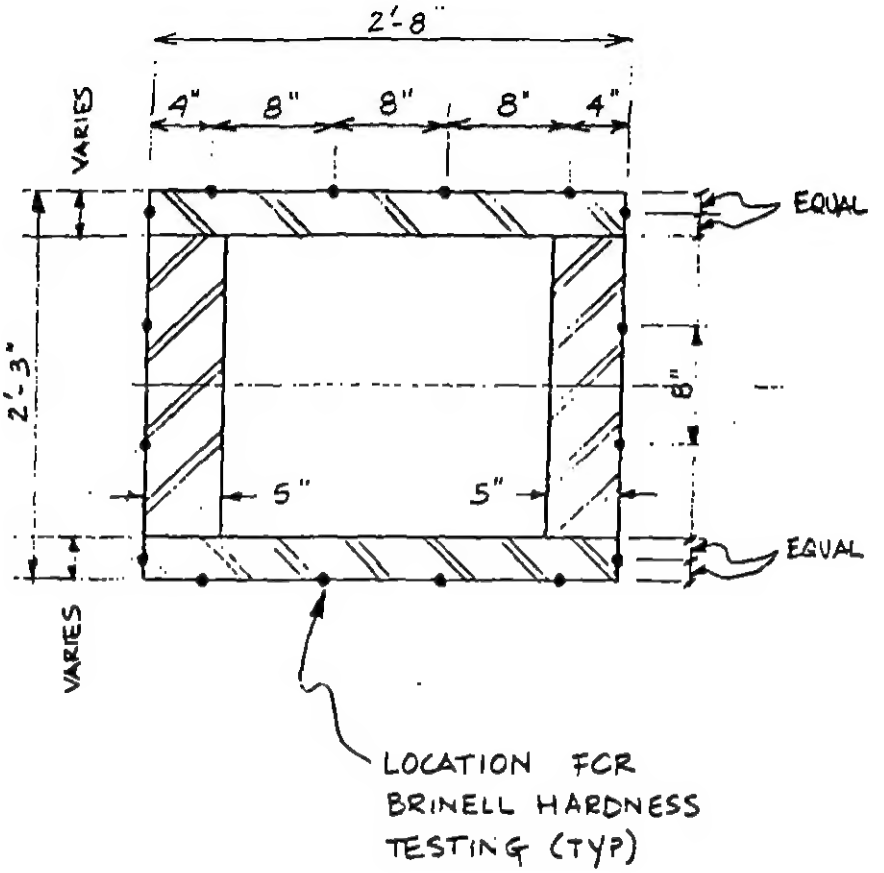

REV.	LERA LESLIE E. ROBERTSON ASSOCIATES CONSULTING STRUCTURAL ENGINEERS	P 1003118	DRAWING NO.
6.28.93 7.21.93	WTC - STRUCTURAL INTEGRITY INVESTIGATION	DRAFT KEH	IN - T1SW
	TOWER 1 SOUTH WALL INSPECTION	DESIGN	1.1-1.1
	INDEX	CHECK	15 JUNE 93

CHAPTER 1 - GENERAL NOTES

IN-T1SW-1.1 INDEX
IN-T1SW-1.2 GENERAL NOTES
IN-T1SW-1.3 PAGE LISTING - CURRENT DATES

CHAPTER 2 - HARDNESS TESTING

IN-T1SW-2.2 COLUMNS
IN-T1SW-2.3 DIAGONALS
IN-T1SW-2.4 SPANDRELS

CHAPTER 3 - MAGNETIC PARTICLE TESTING

IN-T1SW-3.2 COLUMN ASSEMBLY WELDS
IN-T1SW-3.3 COLUMN SPLICES
IN-T1SW-3.4 CONNECTIONS
IN-T1SW-3.5 COLUMNS
IN-T1SW-3.6 SPANDRELS

CHAPTER 4 - ULTRASONIC TESTING

IN-T1SW-4.2 COLUMNS
IN-T1SW-4.3 CONNECTIONS
IN-T1SW-4.4 SPANDRELS

CHAPTER 5 - CORE SPECIMENS

IN-T1SW-5.2 COLUMNS

REV.	LERA LESLIE E. ROBERTSON ASSOCIATES CONSULTING STRUCTURAL ENGINEERS	P 1003119	DRAWING NO.
	WTC- STRUCTURAL INTEGRITY INVESTIGATION	DRAWN KEH	IN-TISW
	TOWER 1 SOUTH WALL INSPECTION	DESIGN KEH	1.1-1-2
	INDEX	CHECK	21 JUL 93

CHAPTER 6 - VISUAL INSPECTION

IN-TISW-6.2 CONNECTION DAMAGE ASSESSMENT

IN-TISW-6.4 SPANDREL DAMAGE ASSESSMENT

IN-TISW-6.6 DIAGONAL DAMAGE ASSESSMENT

ONFIDENTIAL

REV.	LERA LESLIE E. ROBERTSON ASSOCIATES CONSULTING STRUCTURAL ENGINEERS	P 100318	DRAWING NO.
	WTC - STRUCTURAL INTEGRITY INVESTIGATION	DRAFT KEH	IN-T1SW
	HARDNESS TESTING	DESIGN	2.3-1
	DIAGONALS	CHECK	15 JUNE 93

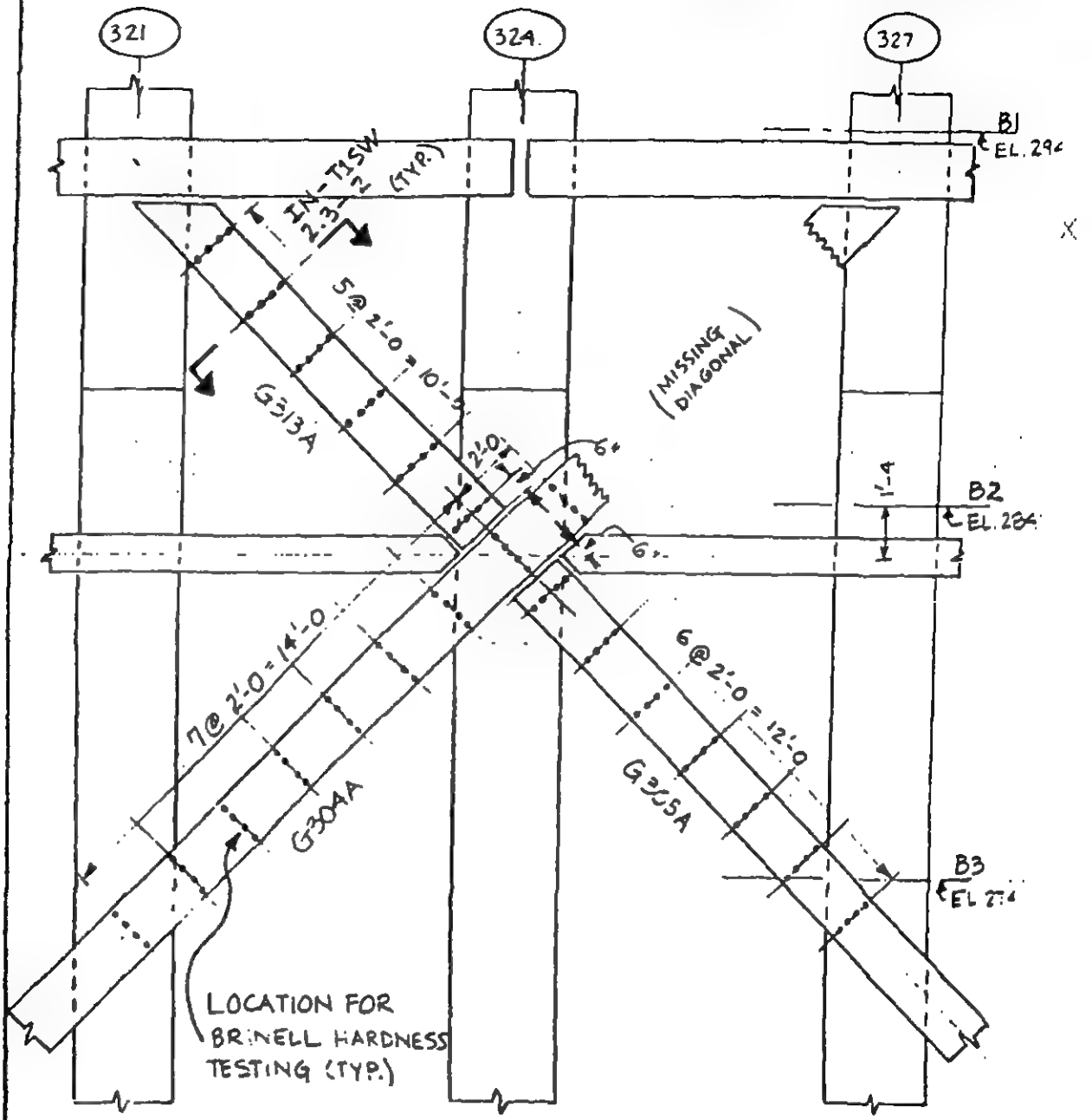

CONFIDENTIAL

EXP 003632

REV.	LERA LESLIE E. ROBERTSON ASSOCIATES CONSULTING STRUCTURAL ENGINEERS	P 1003118	DRAWING NO.
	WTC - STRUCTURAL INTEGRITY INVESTIGATION	DRAFT KEH	IN-TISM 2.3-2
	HARDNESS TESTING DIAGONALS	DESIGN	
		CHECK	15 JUNE 93

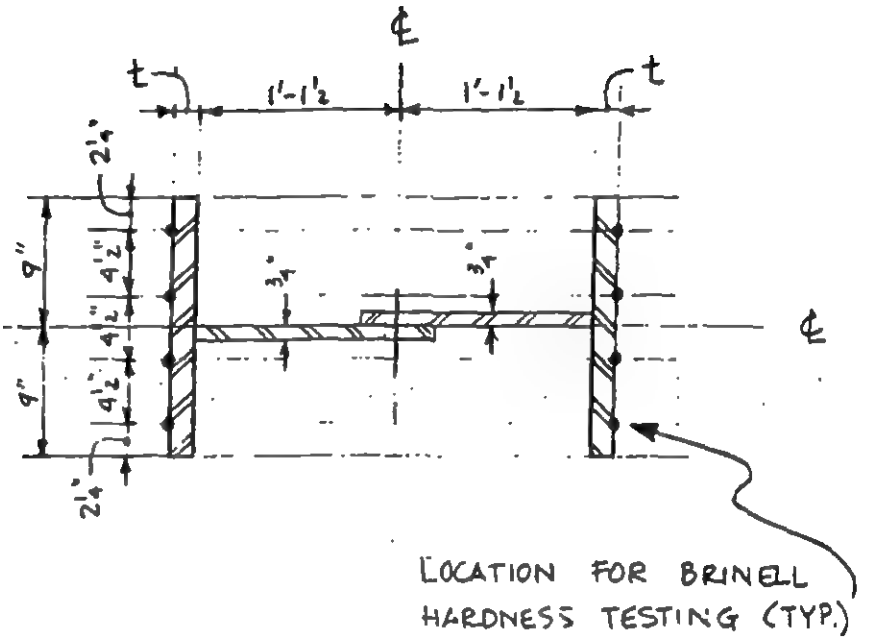

DIAGONAL	t
G304A	1⅜"
G305A	1¼"
G303A	1¼"

CONFIDENTIAL

EXP 003633

REV.	LERA LESLIE E. ROBERTSON ASSOCIATES CONSULTING STRUCTURAL ENGINEERS	P 1003119	DRAWING NO.
	WTC - STRUCTURAL INTEGRITY INVESTIGATION	DRAFT KEH	IN-T1SW 2.3-3.1
	HARDNESS TESTING DIAGONALS	DESIGN	
		CHECK	24 JUN 93

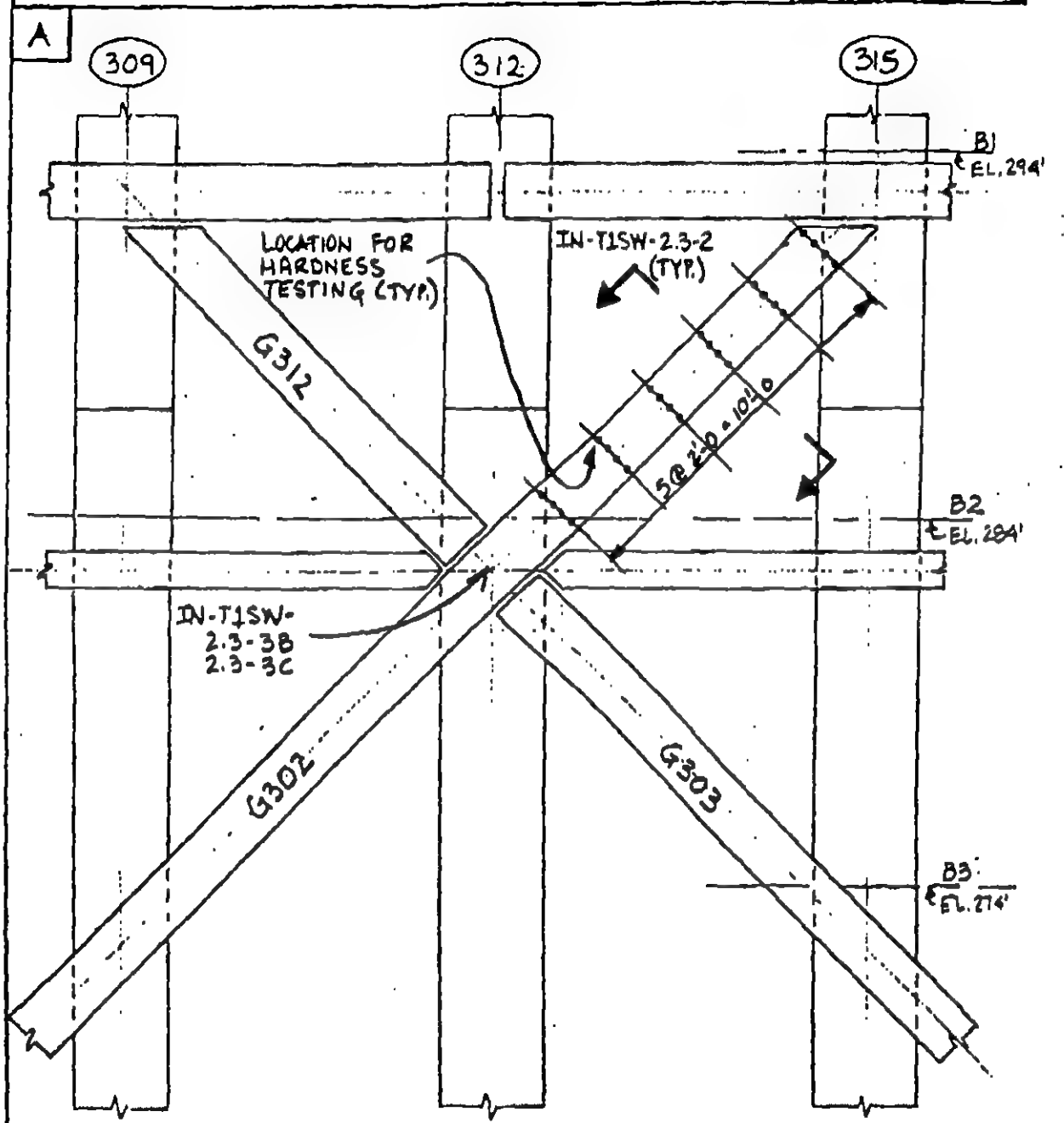

REV.	LERA LESLIE E. ROBERTSON ASSOCIATES CONSULTING STRUCTURAL ENGINEERS	P 003119	DRAWING NO. IN - T1SW 2.3-3.2
	WTC - STRUCTURAL INTEGRITY INVESTIGATION	DRAFT KEH	
	HARDNESS TESTING	DESIGN	
	DIAGONALS	CHECK	24 JUN 93

B

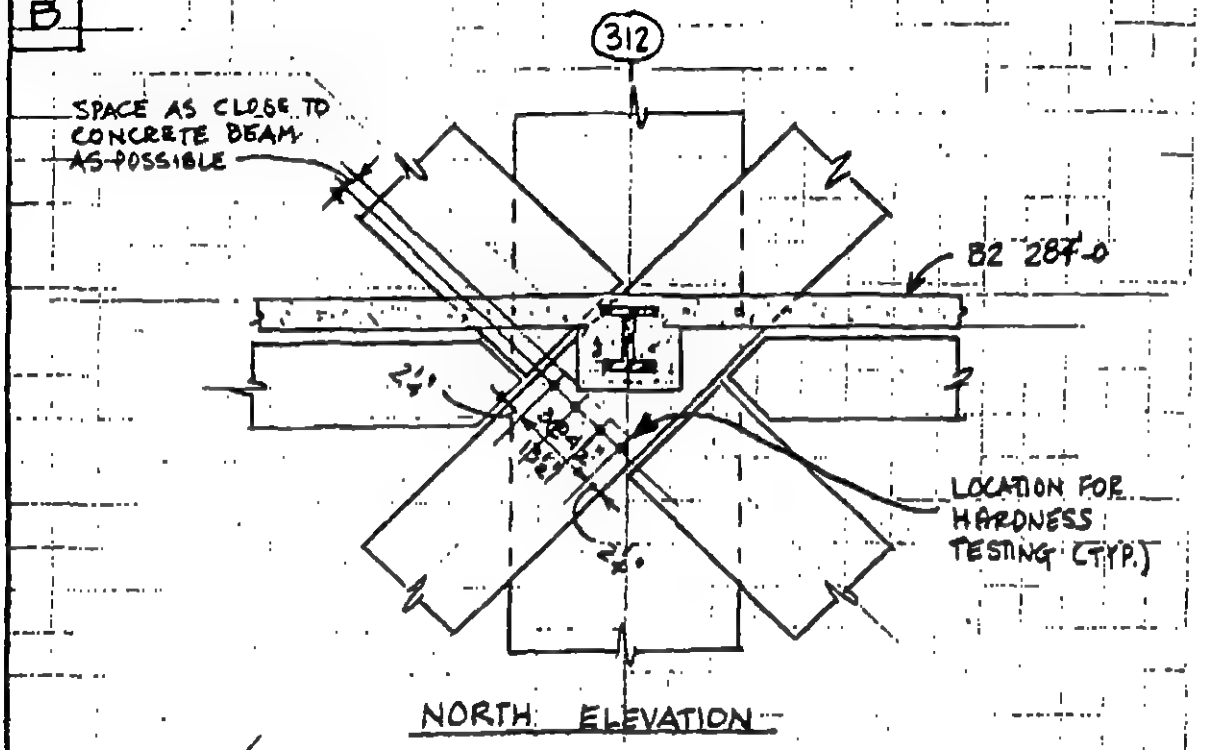

NORTH ELEVATION

C

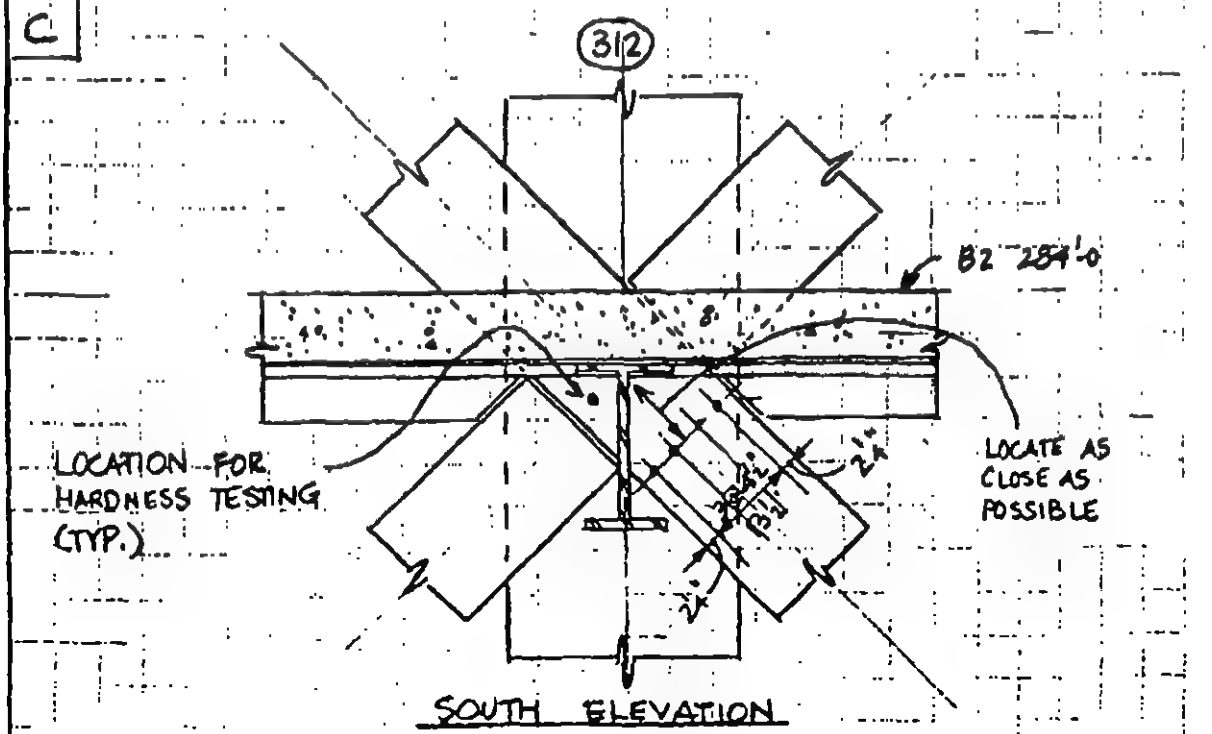

SOUTH ELEVATION

REV.	LERA LESLIE E. ROBERTSON ASSOCIATES CONSULTING STRUCTURAL ENGINEERS	P .CC3118	DRAWING NO.
6-17-93	WTC - STRUCTURAL INTEGRITY INVESTIGATION	DRAFT KEM	IN-TISW 2.4-1
	HARDNESS TESTING	DESIGN	
	SPANDRELS	CHECK	15 JUNE 93

A

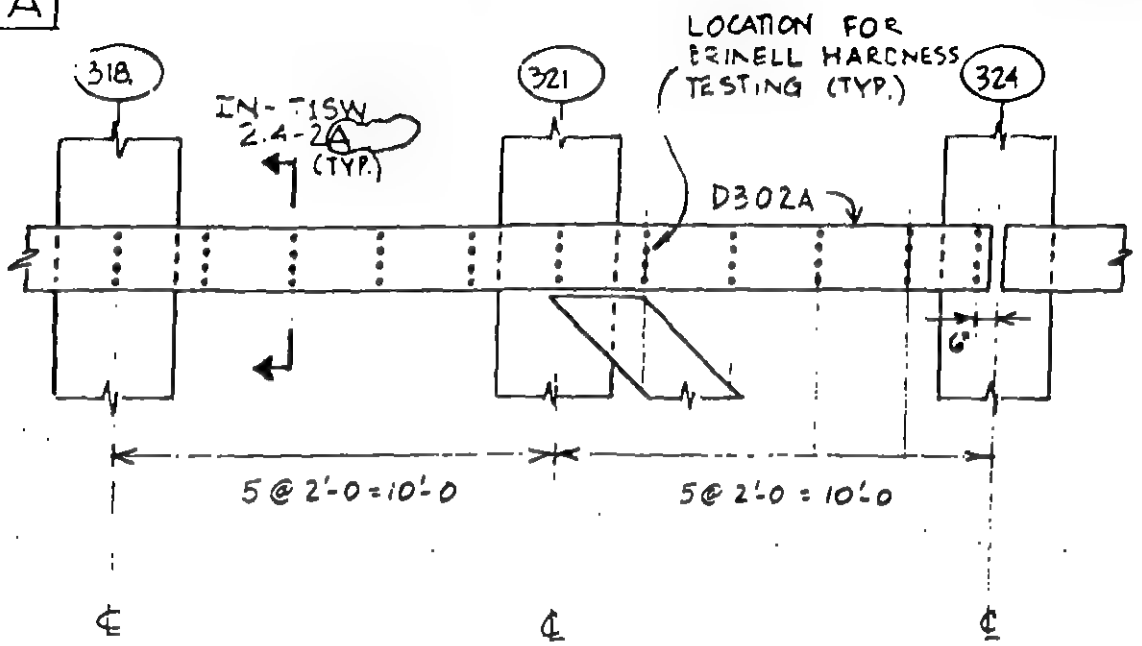

B

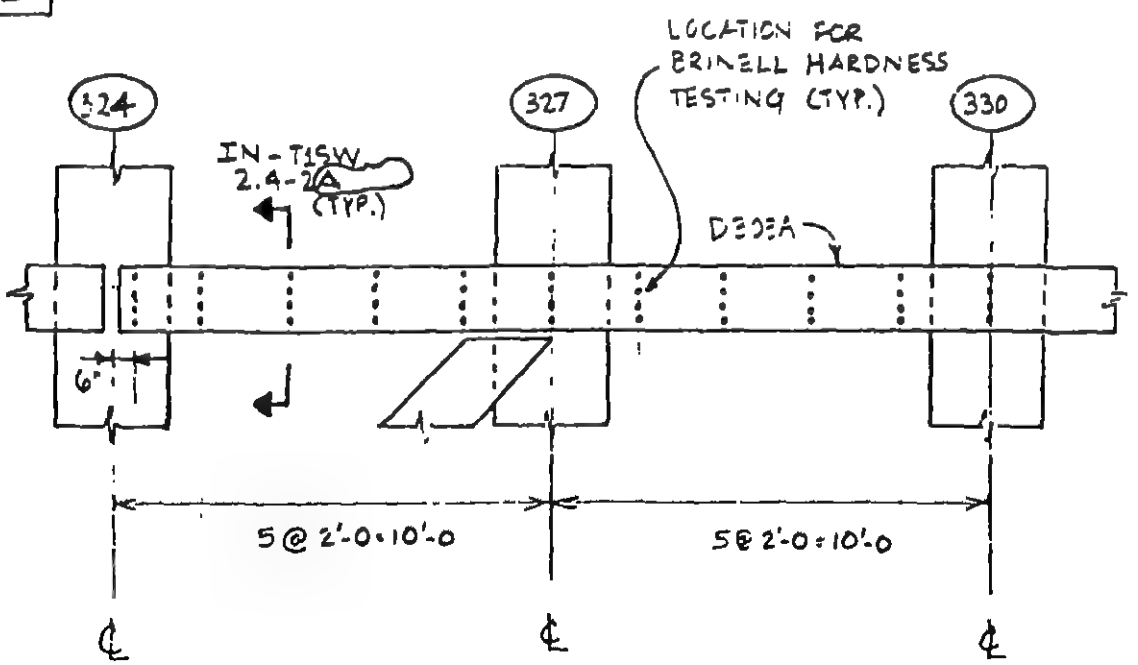

CONFIDENTIAL

REV.	LERA LESLIE E. ROBERTSON ASSOCIATES CONSULTING STRUCTURAL ENGINEERS	P 100C3118	DRAWING NO.
6-17-93	WTC - STRUCTURAL INTEGRITY INVESTIGATION	DRAFT KEH	IN-T1SW 2.A-2
	HARDNESS TESTING SPANDRELS	DESIGN	
		CHECK	15 JUNE 93

A

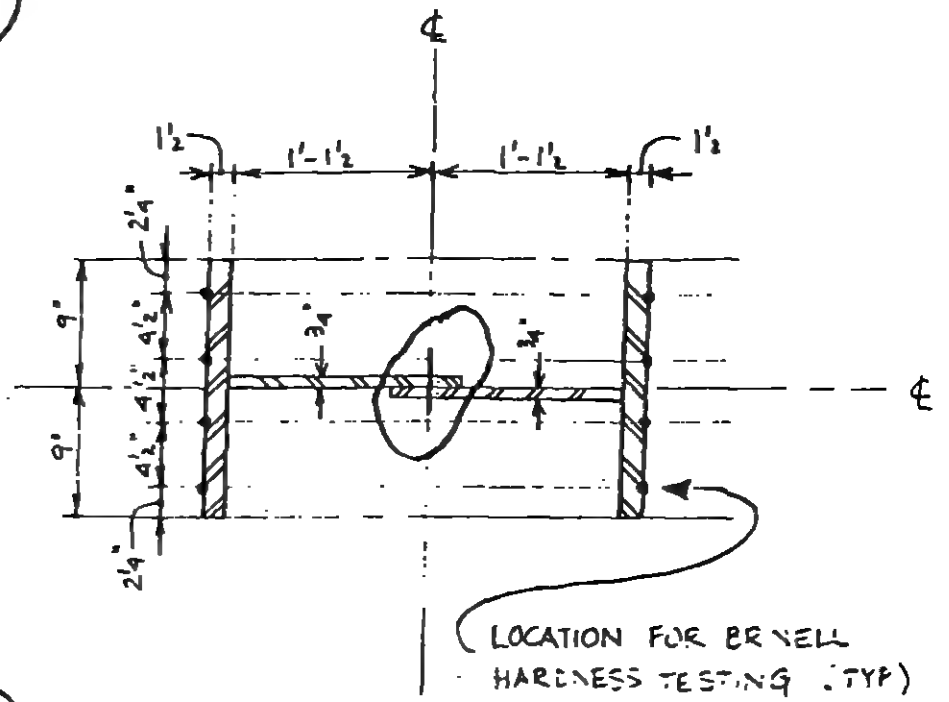

B

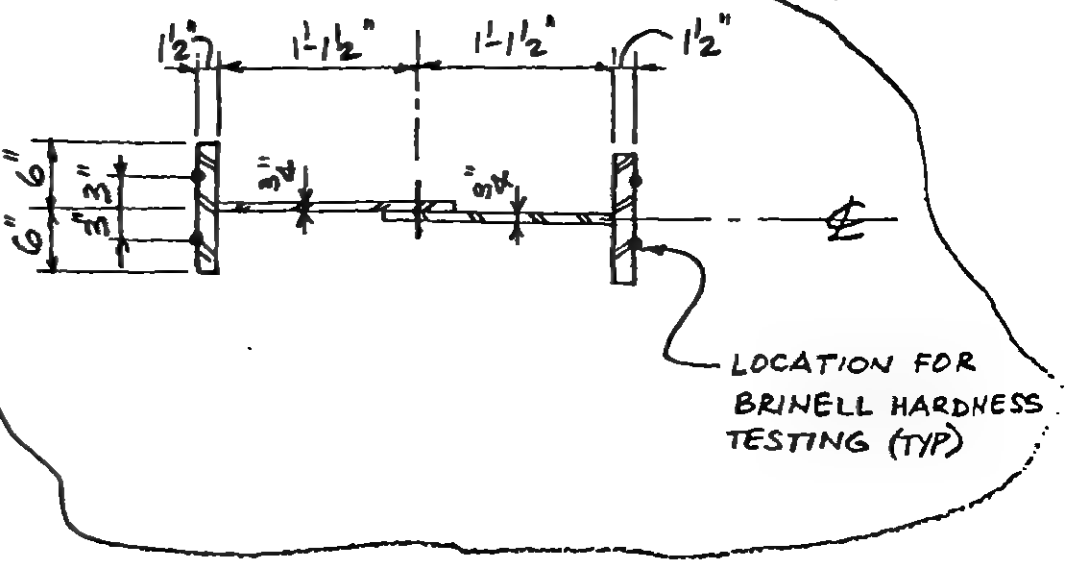

CONFIDENTIAL

EXP 003637

REV.	LERA LESLIE E. ROBERTSON ASSOCIATES CONSULTING STRUCTURAL ENGINEERS	P 1003118	DRAWING NO.
	WTC - STRUCTURAL INTEGRITY INVESTIGATION	DRAFT	IN-TISW
	HARDNESS TESTING SPANDRELS	DESIGN WJP	2.4-3
		CHECK	17 JUNE 93

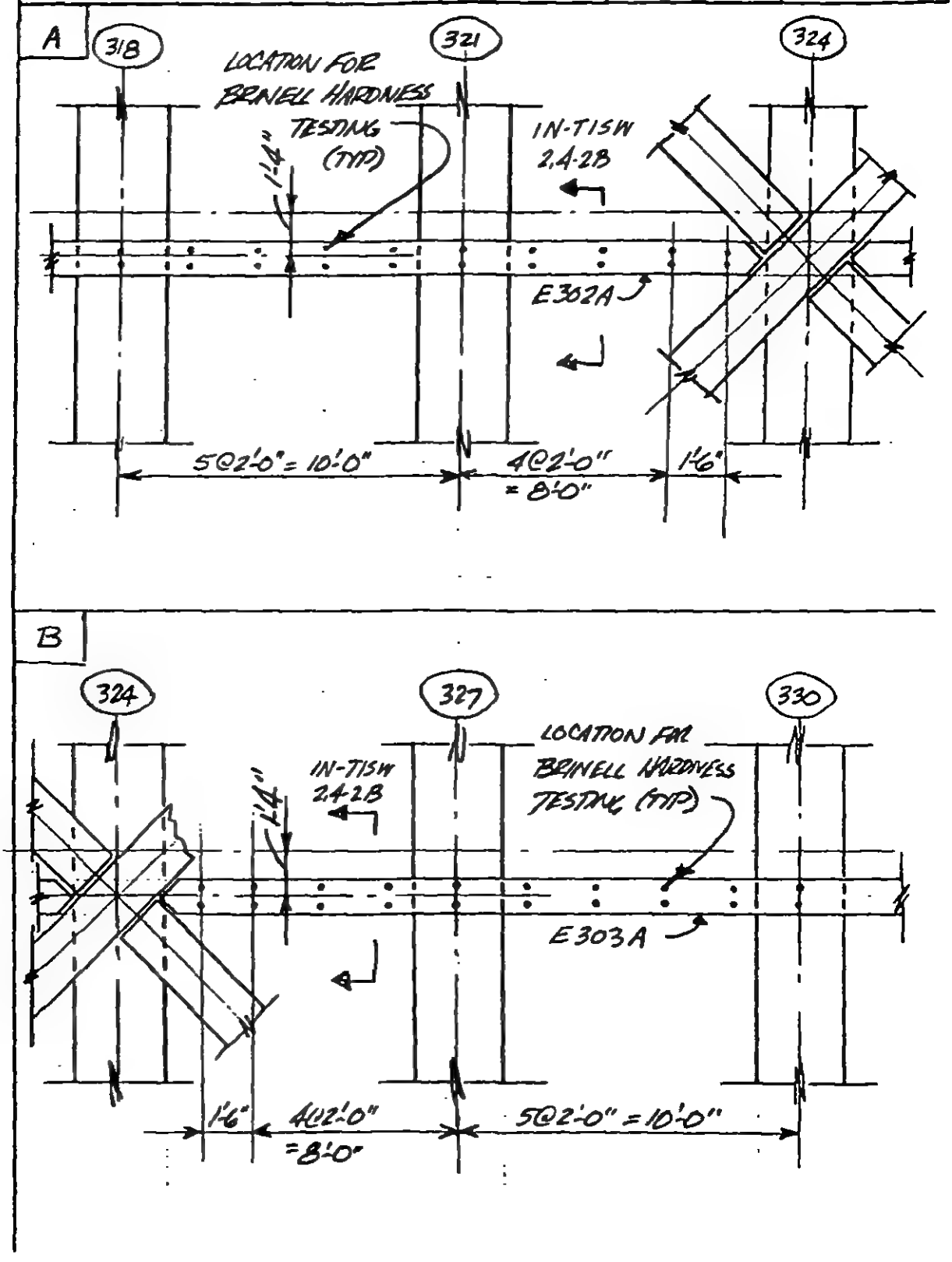

REV.	LERA LESLIE E. ROBERTSON ASSOCIATES CONSULTING STRUCTURAL ENGINEERS	P 1003118	DRAWING NO. IN-T1SW 3.2-1
	WTC - STRUCTURAL INTEGRITY INVESTIGATION	DRAFT KEH	
	MAGNETIC PARTICLE TESTING COLUMN ASSEMBLY WELDS	DESIGN	
		CHECK	15 JUNE 93

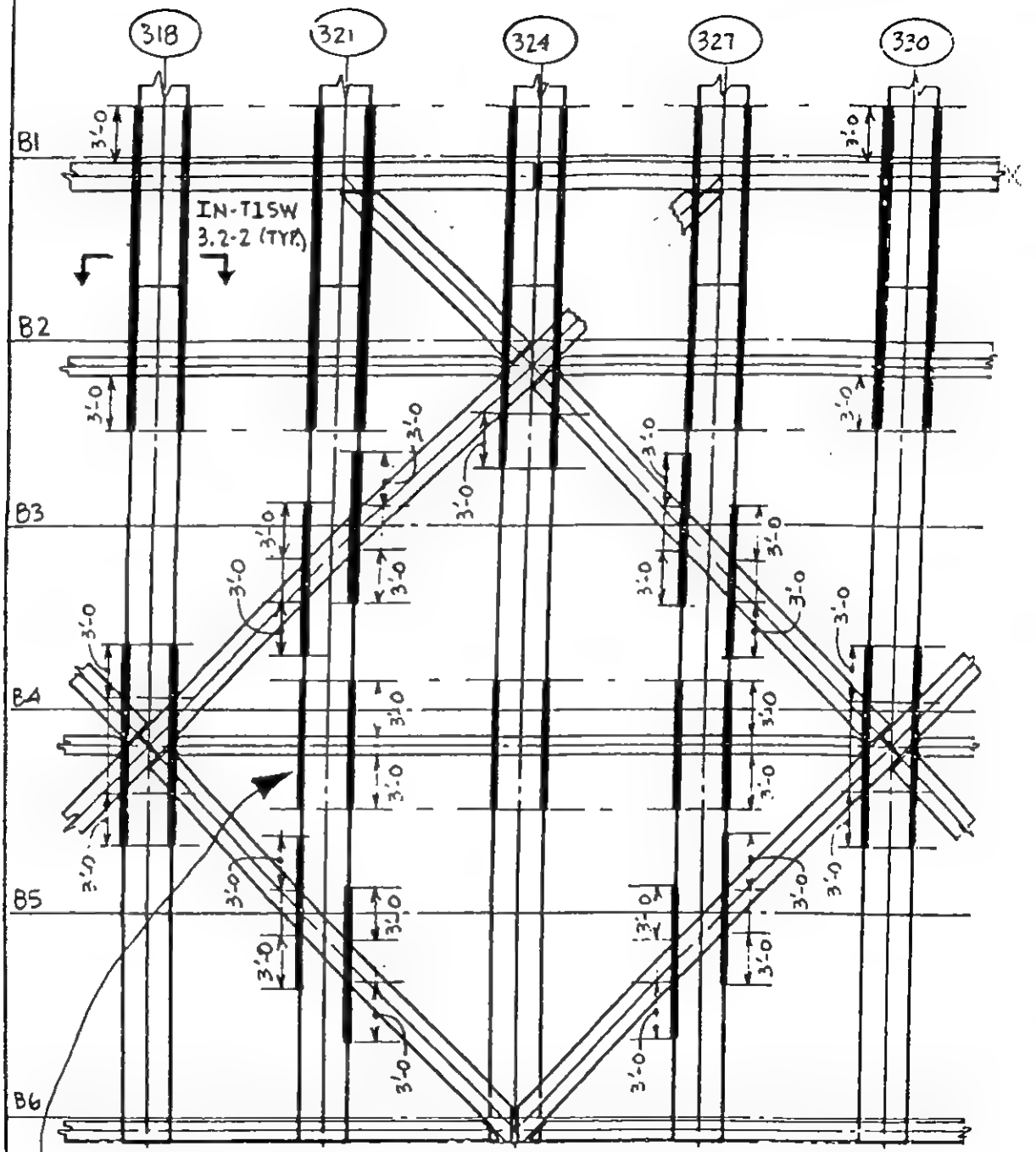

PERFORM MAGNETIC PARTICLE TESTING OF COLUMN ASSEMBLY WELDS ALONG INDICATED LENGTHS (TYP.) - SEE IN-T1SW-3.2-2

FOR DETAIL OF EXISTING WELDS, SEE IN-T1SW-3.2-3

REV.	LERA LESLIE E. ROBERTSON ASSOCIATES CONSULTING STRUCTURAL ENGINEERS	P 1003118	DRAWING NO.
	WTC - STRUCTURAL INTEGRITY INVESTIGATION	DRAFT KEH	IN-TISN 3.2-2
	MAGNETIC PARTICLE TESTING	DESIGN	
	COLUMN ASSEMBLY WELDS	CHECK	15 JUNE 93

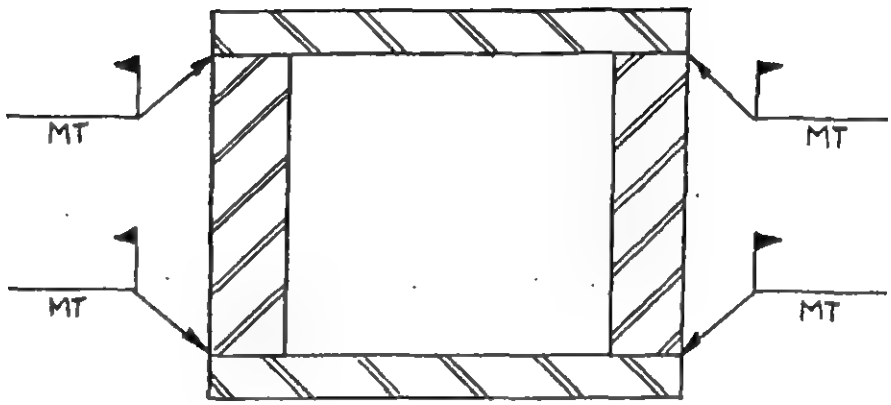

REV. LERA CONSULTING STRUCTURAL ENGINEERS

WTC - STRUCTURAL INTEGRITY INVESTIGATION	DRAFT KEH	IN-T1SW 3.2-3
MAGNETIC PARTICLE TESTING COLUMN ASSEMBLY WELDS	DESIGN	
	CHECK	15 JUNE 93

REV. 24 JUNE 93

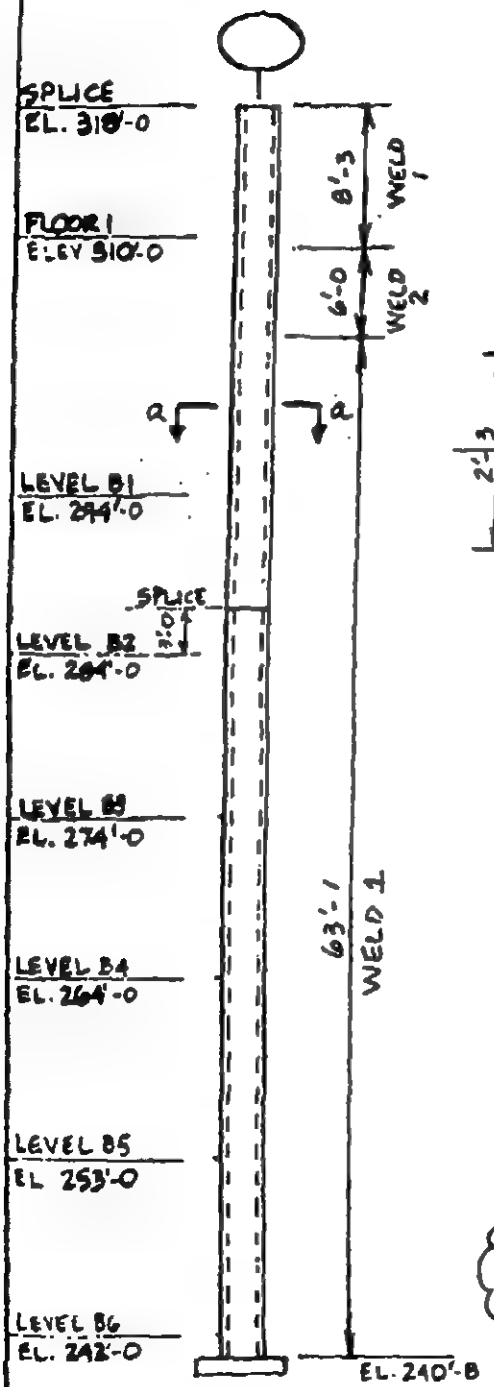

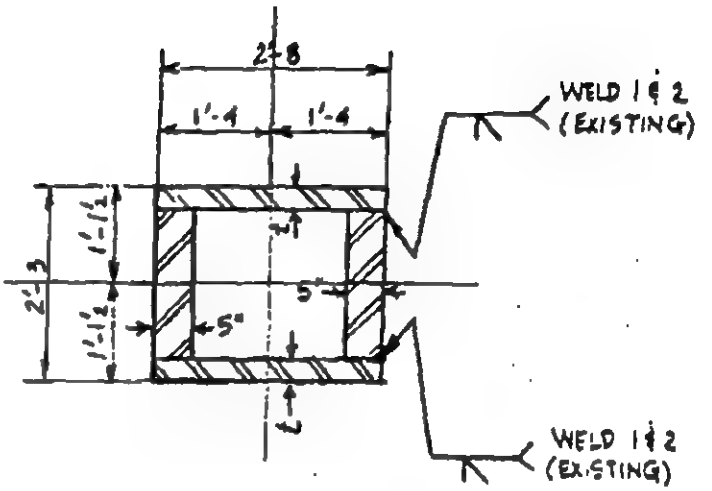

SECTION a-a

WELD 1	7/8"
WELD 2	1"

COLUMN	t
318	2¾"
321	2¾"
324	2¾"
327	2⅞"
330	3"
312	2¾"
315	2¾"

EXISTING WELDS

REV.	LERA LESLIE E. ROBERTSON ASSOCIATES CONSULTING STRUCTURAL ENGINEERS	P 1003119	DRAWING NO. IN-T1SW 3.2-4
	WTC - STRUCTURAL INTEGRITY INVESTIGATION	DRAFT KEH	
	MAGNETIC PARTICLE TESTING COLUMN ASSEMBLY WELDS	DESIGN	
		CHECK	24 JUN 93

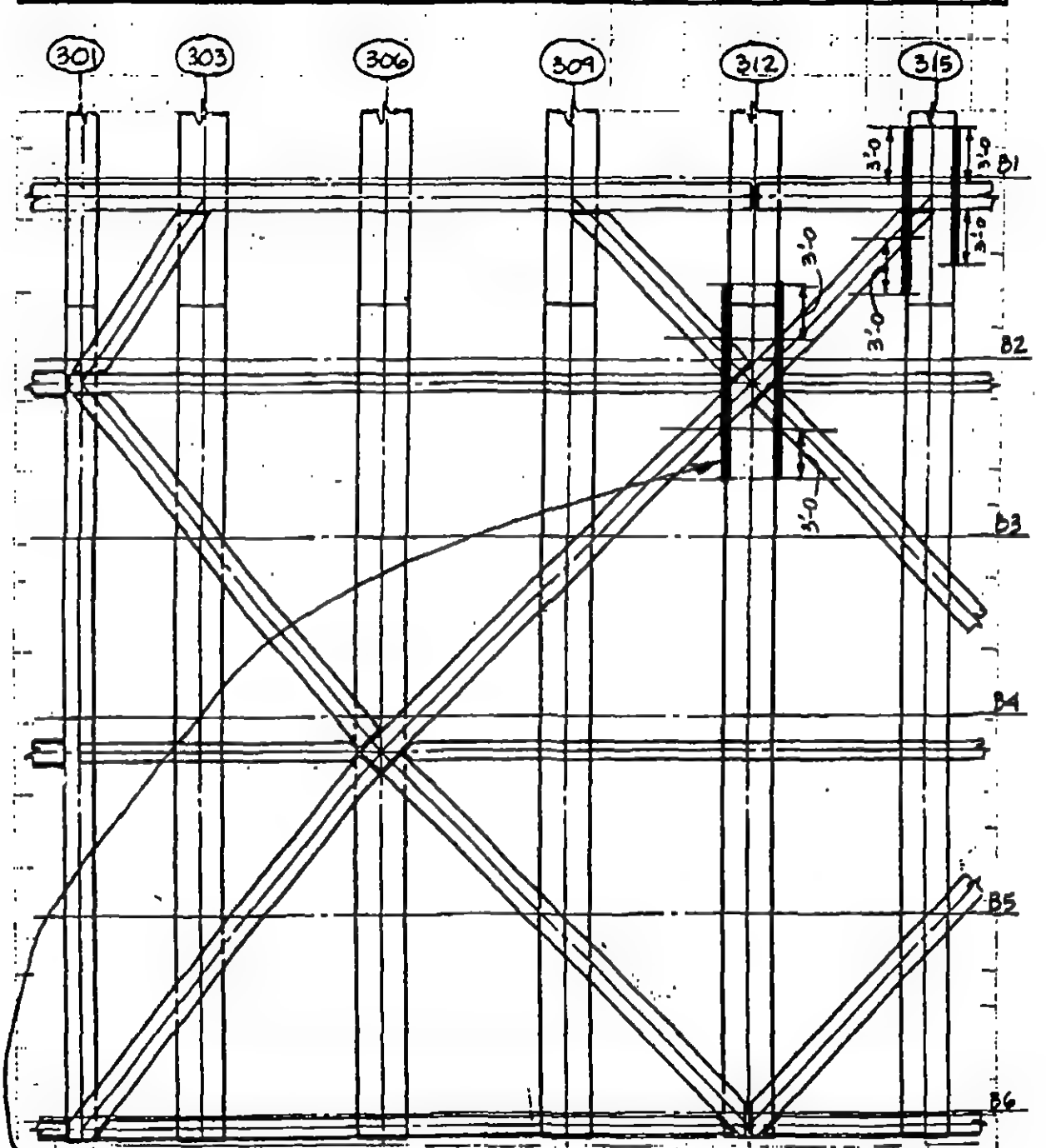

PERFORM MAGNETIC PARTICLE TESTING OF COLUMN ASSEMBLY WELDS ALONG INDICATED LENGTHS (TYP.) - SEE IN-T1SW-3.2-2

FOR DETAIL OF EXISTING WELDS, SEE IN-T1SW-3.2-3.

REV.	LERA LESLIE E. ROBERTSON ASSOCIATES CONSULTING STRUCTURAL ENGINEERS	P 100318	DRAWING NO.
	WTC - STRUCTURAL INTEGRITY INVESTIGATION	DRAFT KEH	IN-T1SW 3.3-1
	MAGNETIC PARTICLE TESTING COLUMN SPLICES	DESIGN	
		CHECK	15 JUNE 93

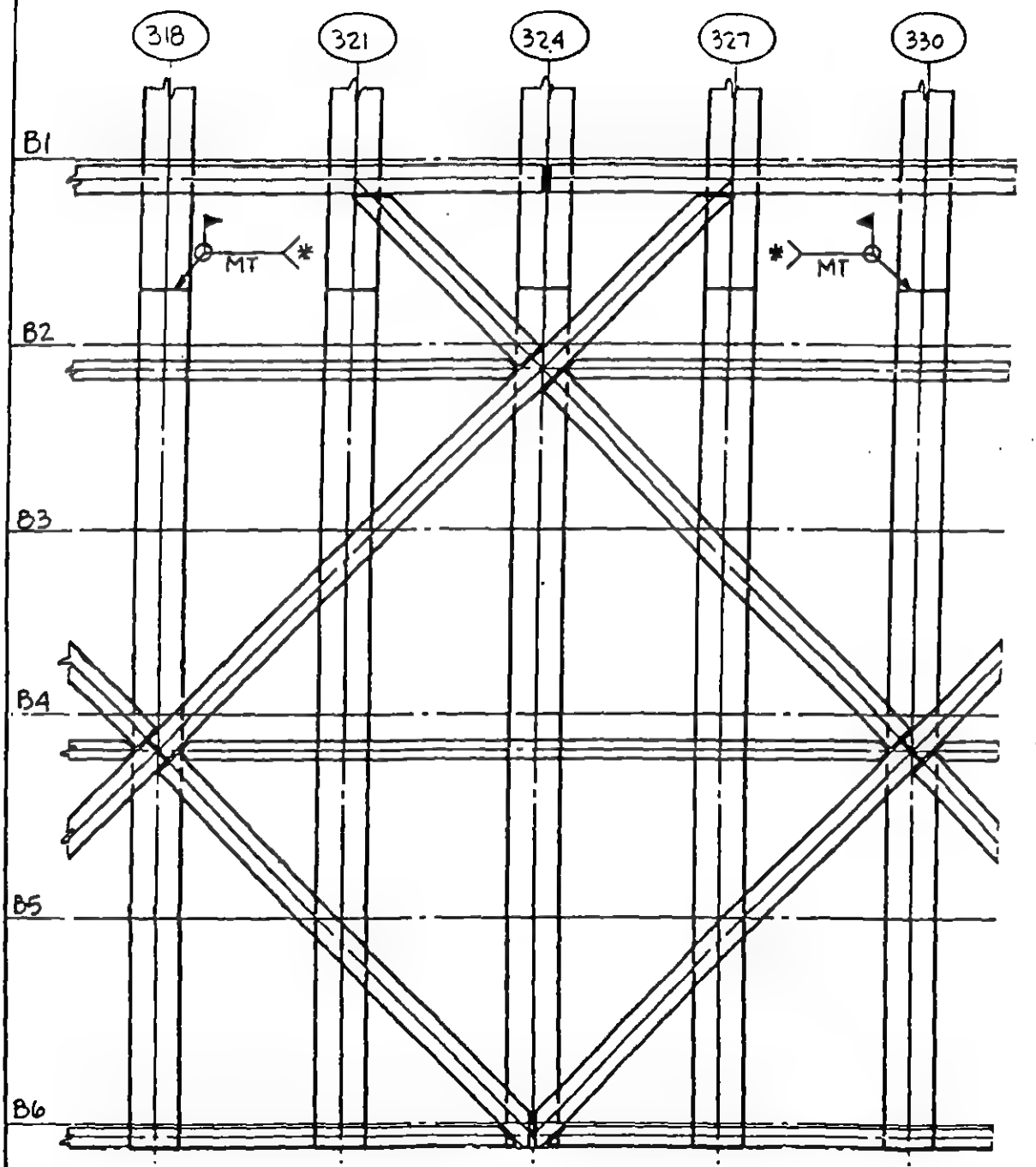

* FOR EXISTING WELD DETAILS, SEE IN-T1SW-3.3-2

REV.	LERA LESLIE E. ROBERTSON ASSOCIATES CONSULTING STRUCTURAL ENGINEERS	P 1003118	DRAWING NO.
	WTC - STRUCTURAL INTEGRITY INVESTIGATION	DRAFT KEH	IN-T1SW
	MAGNETIC PARTICLE TESTING COLUMN SPLICES	DESIGN	3.3-2
		CHECK	15 JUNE 93

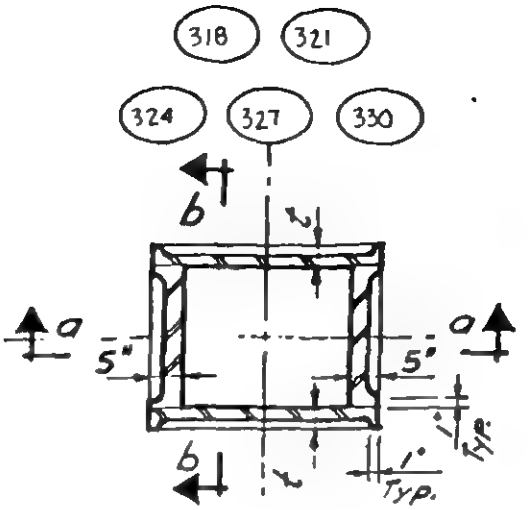

PLAN - WELD PREPARATION

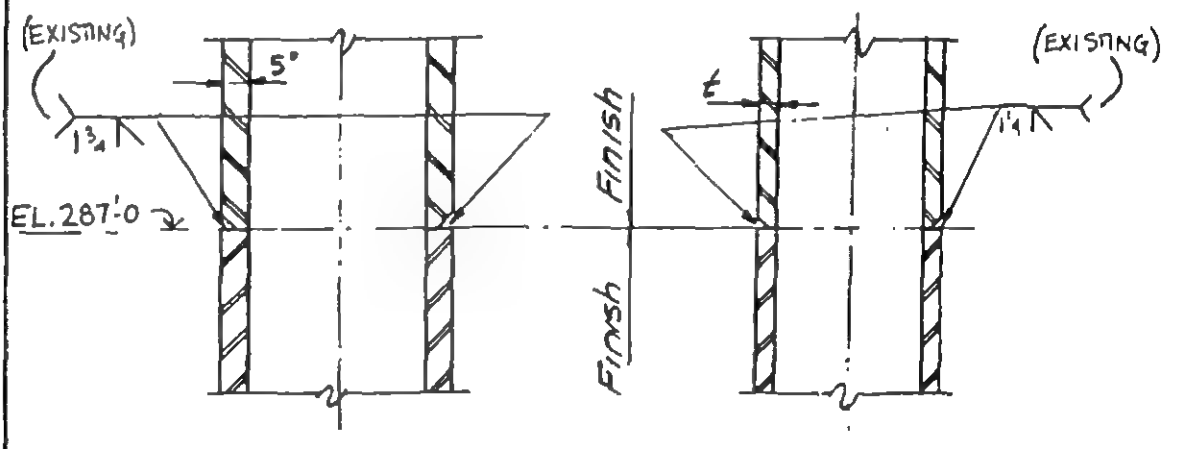

SECTION a-a

SECTION b-b

COLUMN	t
318	2¾"
321	2¾"
324	2¾"
327	2⅞"
330	3"

EXISTING WELDS

CONFIDENTIAL

EXP 003644

REV.	LERA LESLIE E. ROBERTSON ASSOCIATES CONSULTING STRUCTURAL ENGINEERS	P1003118	DRAWING NO.
	WTC - STRUCTURAL INTEGRITY INVESTIGATION	DRAFT KEH	IN - T1SW 3.4-1
	MAGNETIC PARTICLE TESTING CONNECTIONS	DESIGN	
		CHECK	15 JUNE 93

A	COLUMN 318.
B	COLUMN 330

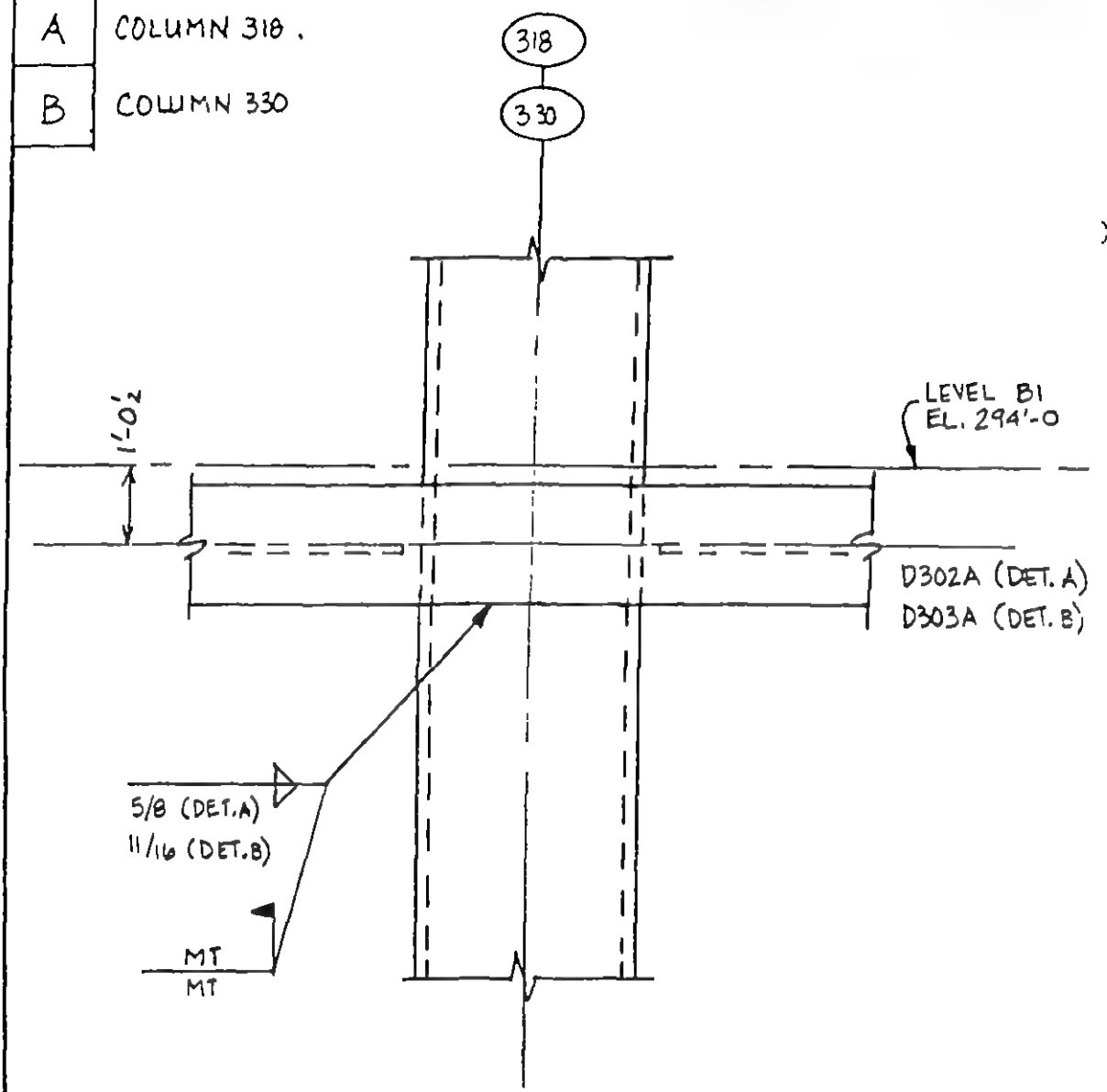

REV.	LERA LESLIE E. ROBERTSON ASSOCIATES CONSULTING STRUCTURAL ENGINEERS	P 1003118	DRAWING NO. IN-T1SW 3.4-2
	WTC - STRUCTURAL INTEGRITY INVESTIGATION	DRAFT KEH	
	MAGNETIC PARTICLE TESTING CONNECTIONS	DESIGN	
		CHECK	15 JUNE 93

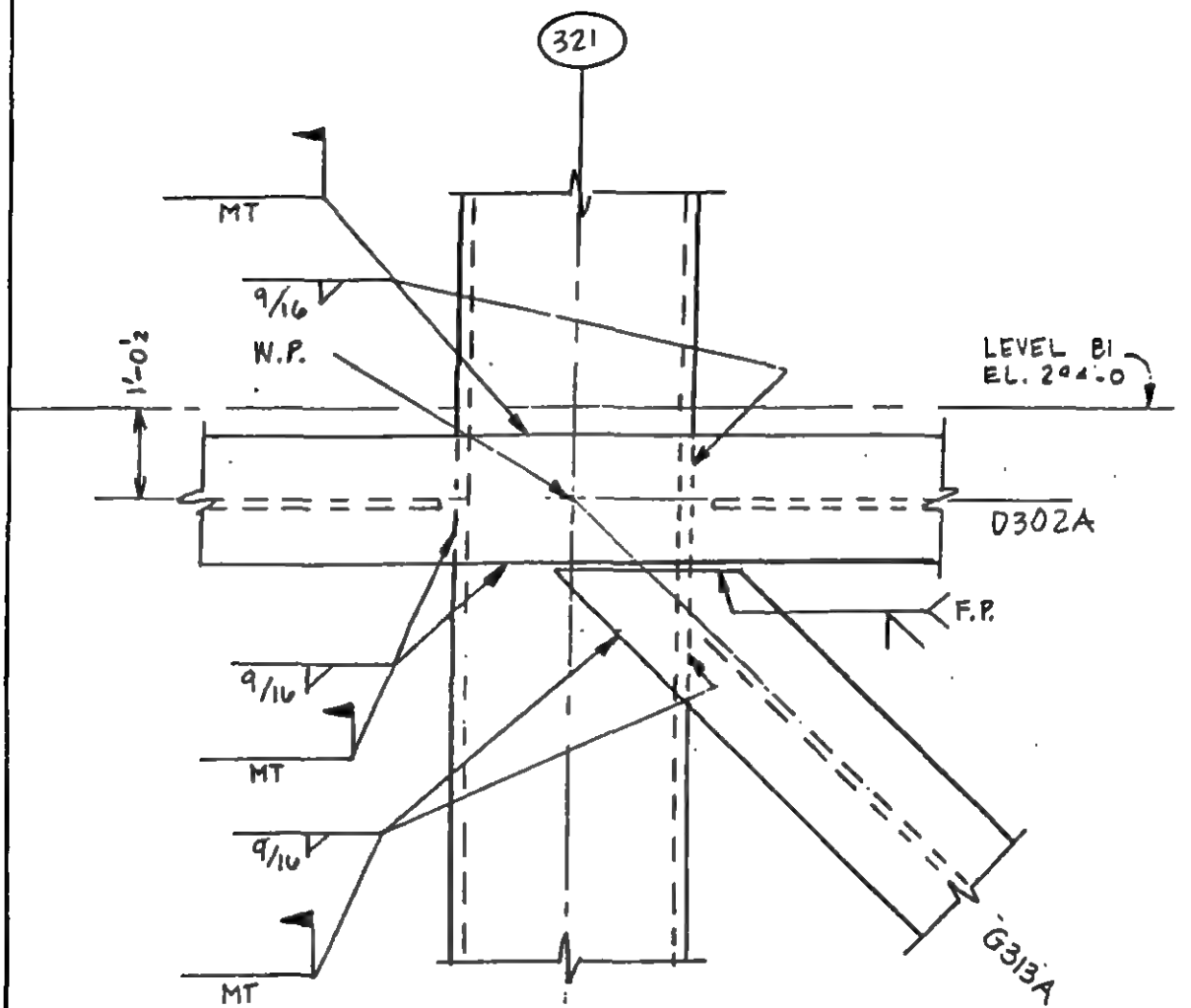

REV.	LERA LESLIE E. ROBERTSON ASSOCIATES CONSULTING STRUCTURAL ENGINEERS	P 1003118	DRAWING NO.
	WTC - STRUCTURAL INTEGRITY INVESTIGATION	DRAFT KEH	IN-T1SW 3.4-3
	MAGNETIC PARTICLE TESTING CONNECTIONS	DESIGN	
		CHECK	15 JUNE 93

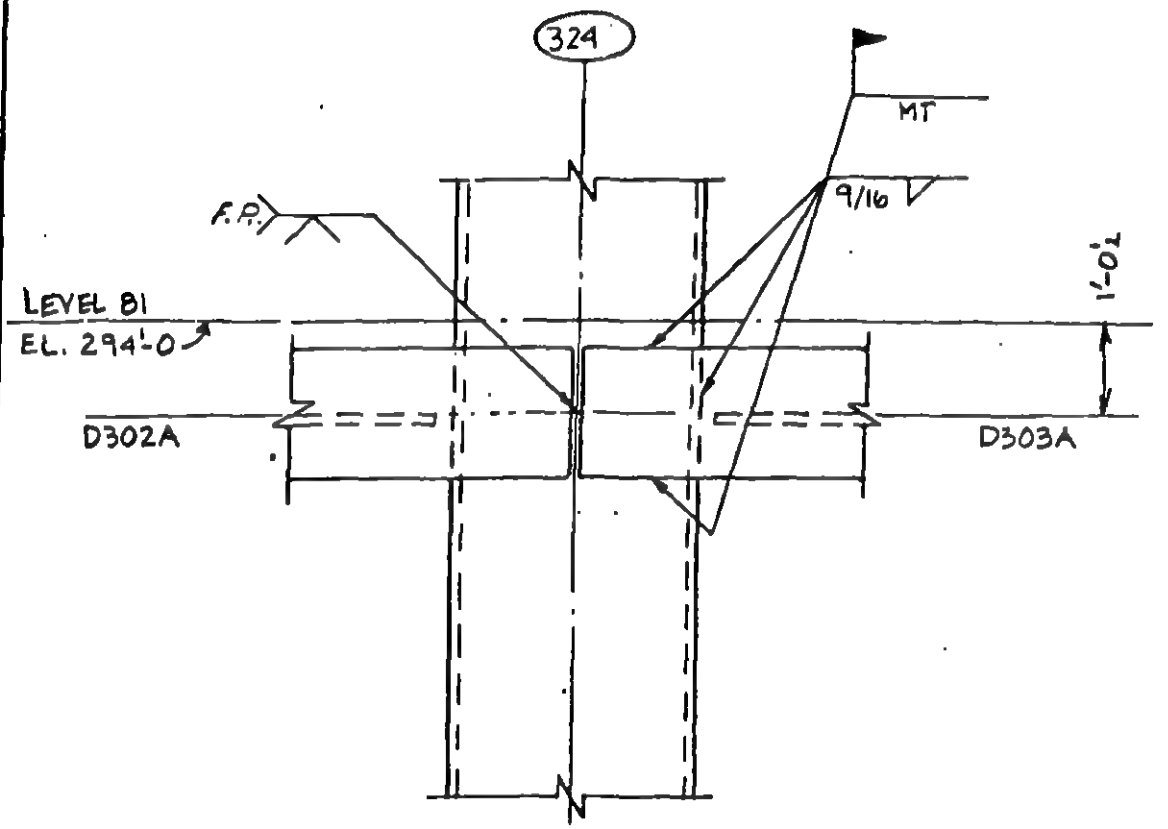

CONFIDENTIAL

EXP 003647

REV.	LERA LESLIE E. ROBERTSON ASSOCIATES CONSULTING STRUCTURAL ENGINEERS	P 1003118	DRAWING NO.
	WTC - STRUCTURAL INTEGRITY INVESTIGATION	DRAFT KEH	IN-T1SW 3.4-4
	MAGNETIC PARTICLE TESTING CONNECTIONS	DESIGN	
		CHECK	15 JUNE 93

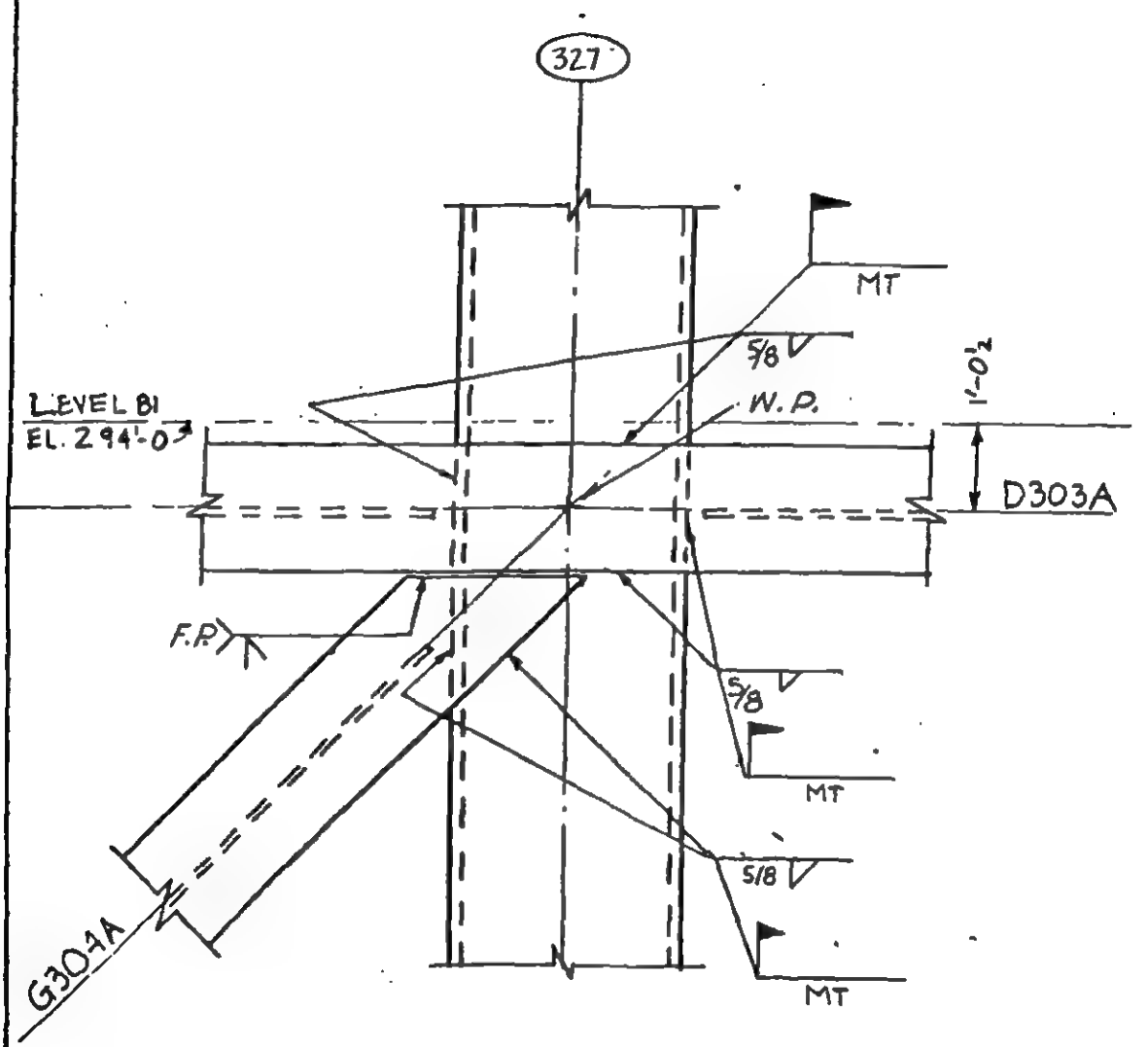

CONFIDENTIAL

EXP 003648

REV.	LERA LESLIE E. ROBERTSON ASSOCIATES CONSULTING STRUCTURAL ENGINEERS	P 1003118	DRAWING NO.
	WTC - STRUCTURAL INTEGRITY INVESTIGATION	DRAFT KEH	IN-T1SW 3.4-5
	MAGNETIC PARTICLE TESTING CONNECTIONS	DESIGN	
		CHECK	15 JUNE 93

A	COLUMN 318
B	COLUMN 321
C	COLUMN 327
D	COLUMN 330

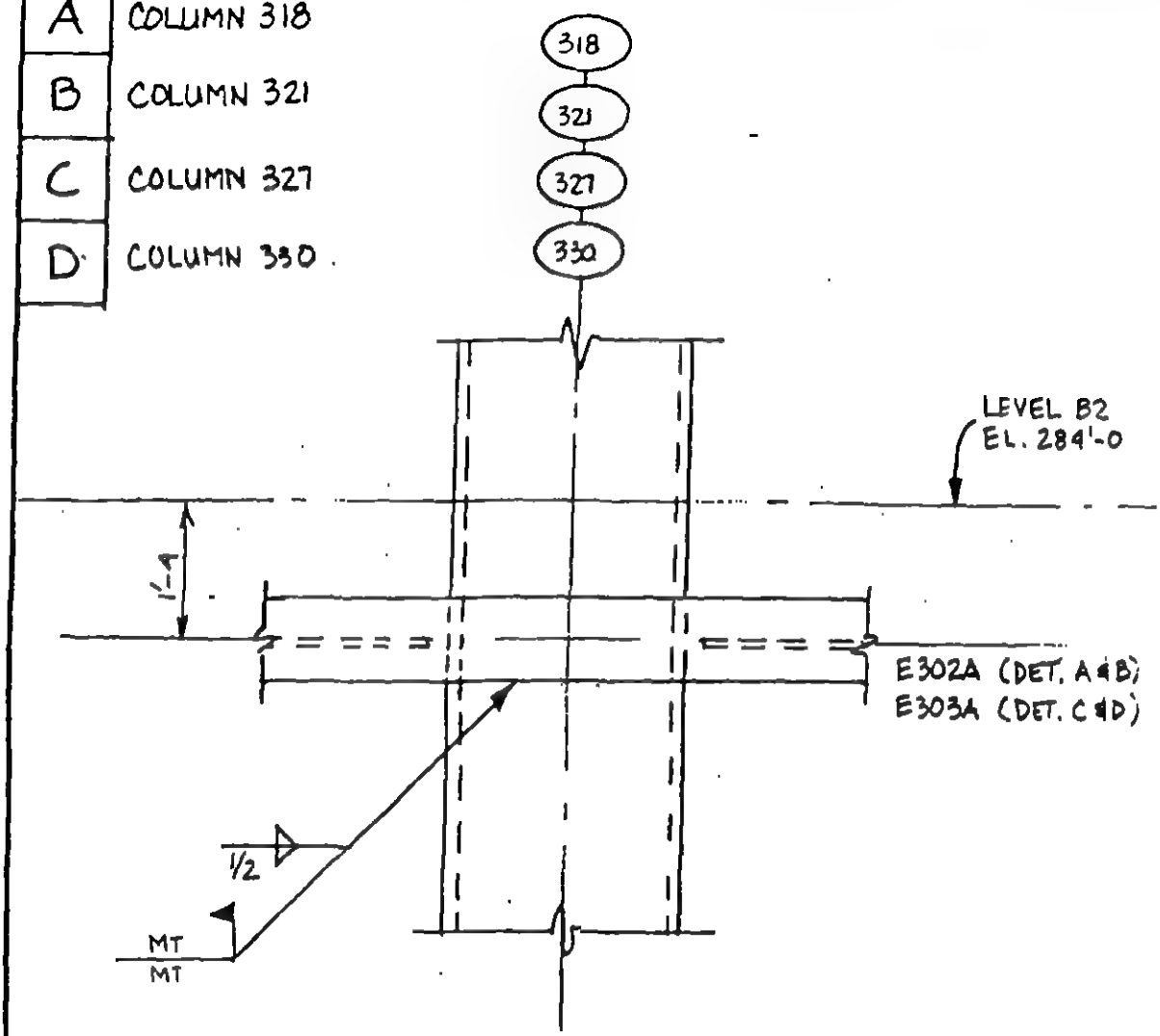

CONFIDENTIAL

EXP 003649

REV.	LERA LESLIE E. ROBERTSON ASSOCIATES CONSULTING STRUCTURAL ENGINEERS	P 1003118	DRAWING NO. IN-T1SW 3.A-6
	WTC - STRUCTURAL INTEGRITY INVESTIGATION	DRAFT KEH	
	MAGNETIC PARTICLE TESTING CONNECTIONS	DESIGN	
		CHECK	15 JUNE 93

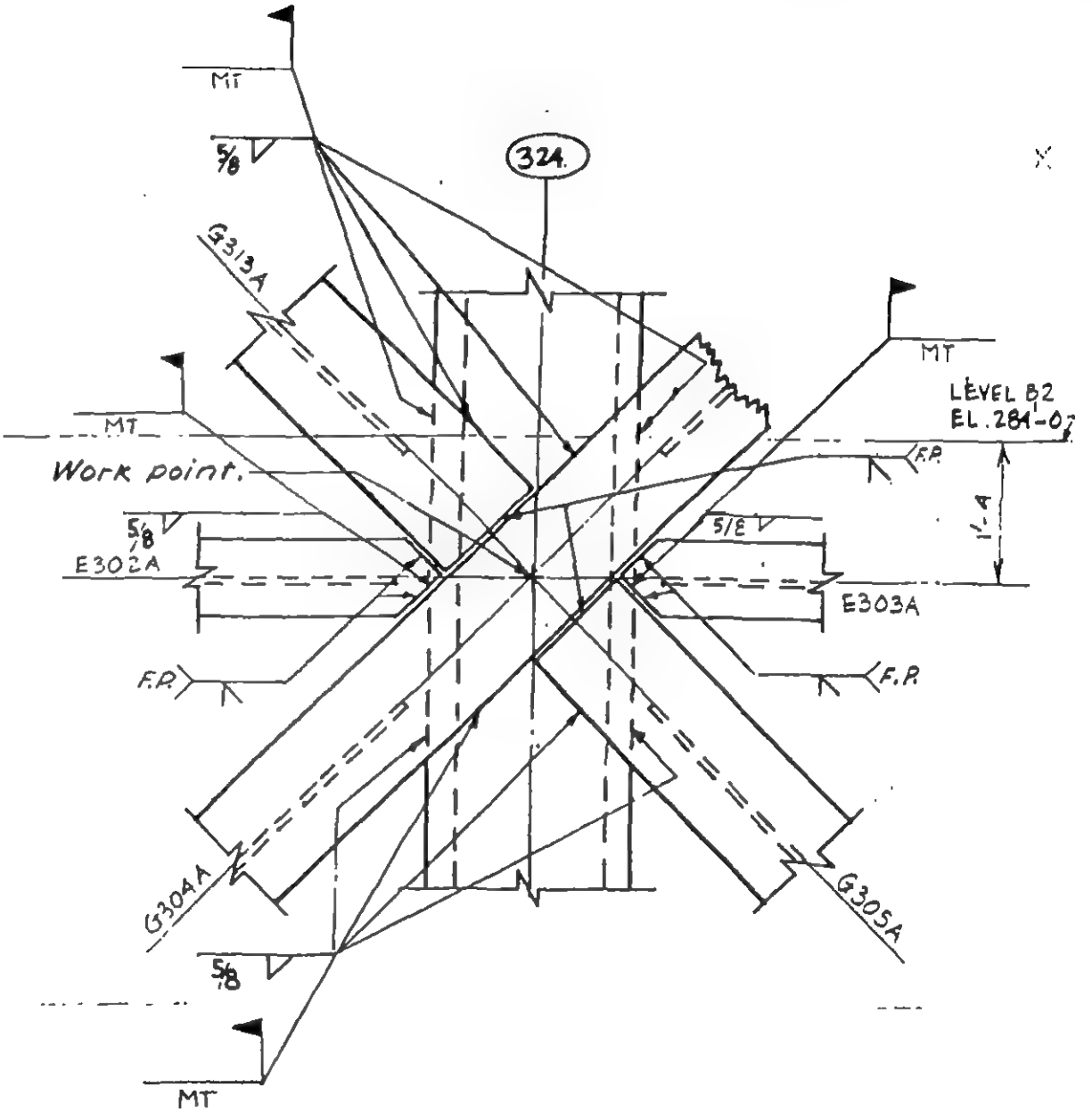

REV. 7/21/93

LERA CONSULTING STRUCTURAL ENGINEERS

WTC - STRUCTURAL INTEGRITY INVESTIGATION	DRAWN KEH	IN-T15W
MAGNETIC PARTICLE TESTING CONNECTIONS	DESIGN	3.4-7
	CHECK	15 JUNE 93

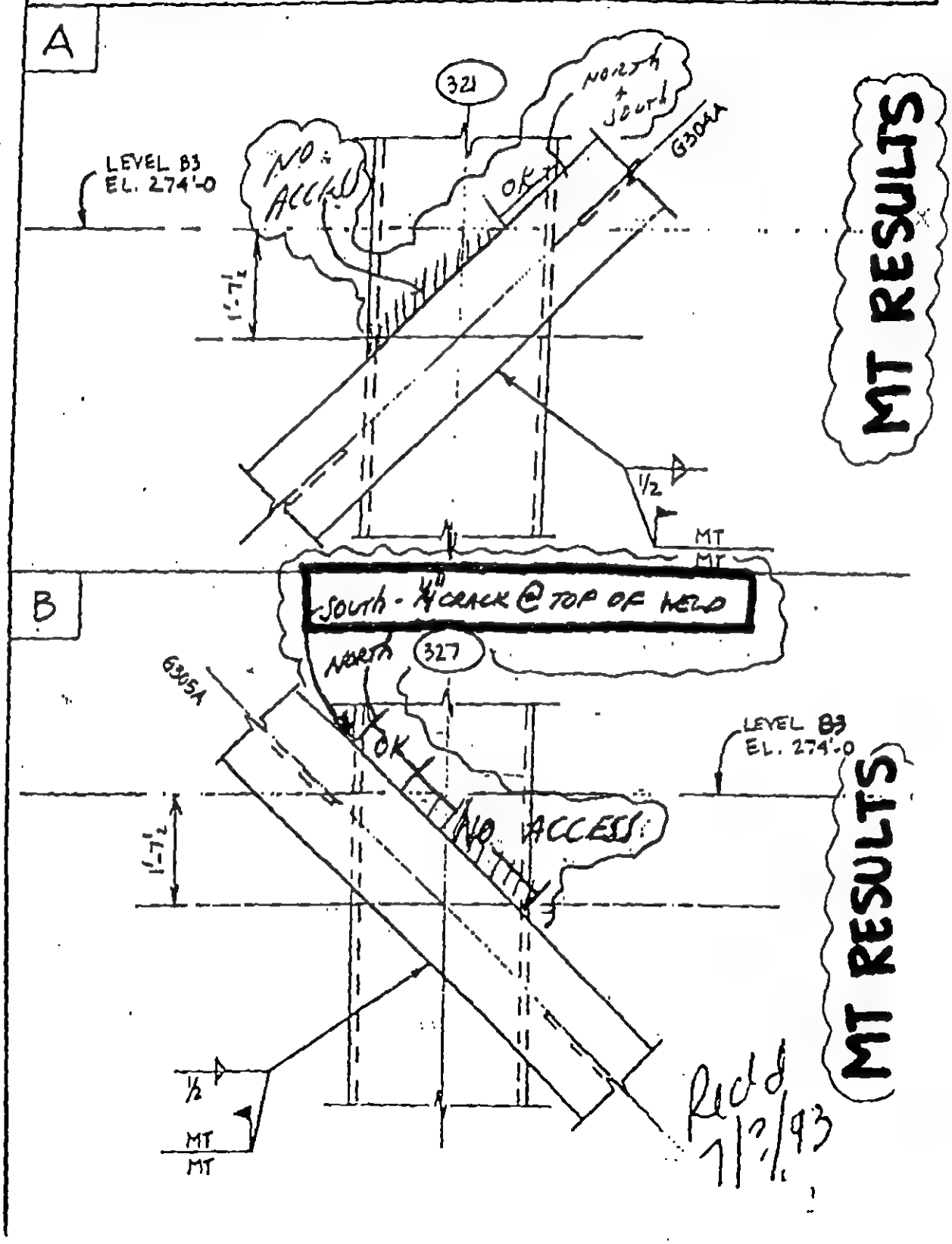

REV.	LERA LESLIE E. ROBERTSON ASSOCIATES CONSULTING STRUCTURAL ENGINEERS	P 1003118	DRAWING NO.
	WTC - STRUCTURAL INTEGRITY INVESTIGATION	DRAFT KEH	IN-T1SW 3.4-8
	MAGNETIC [illegible] CONNECTIONS	DESIGN	
		CHECK	15 JUNE 93

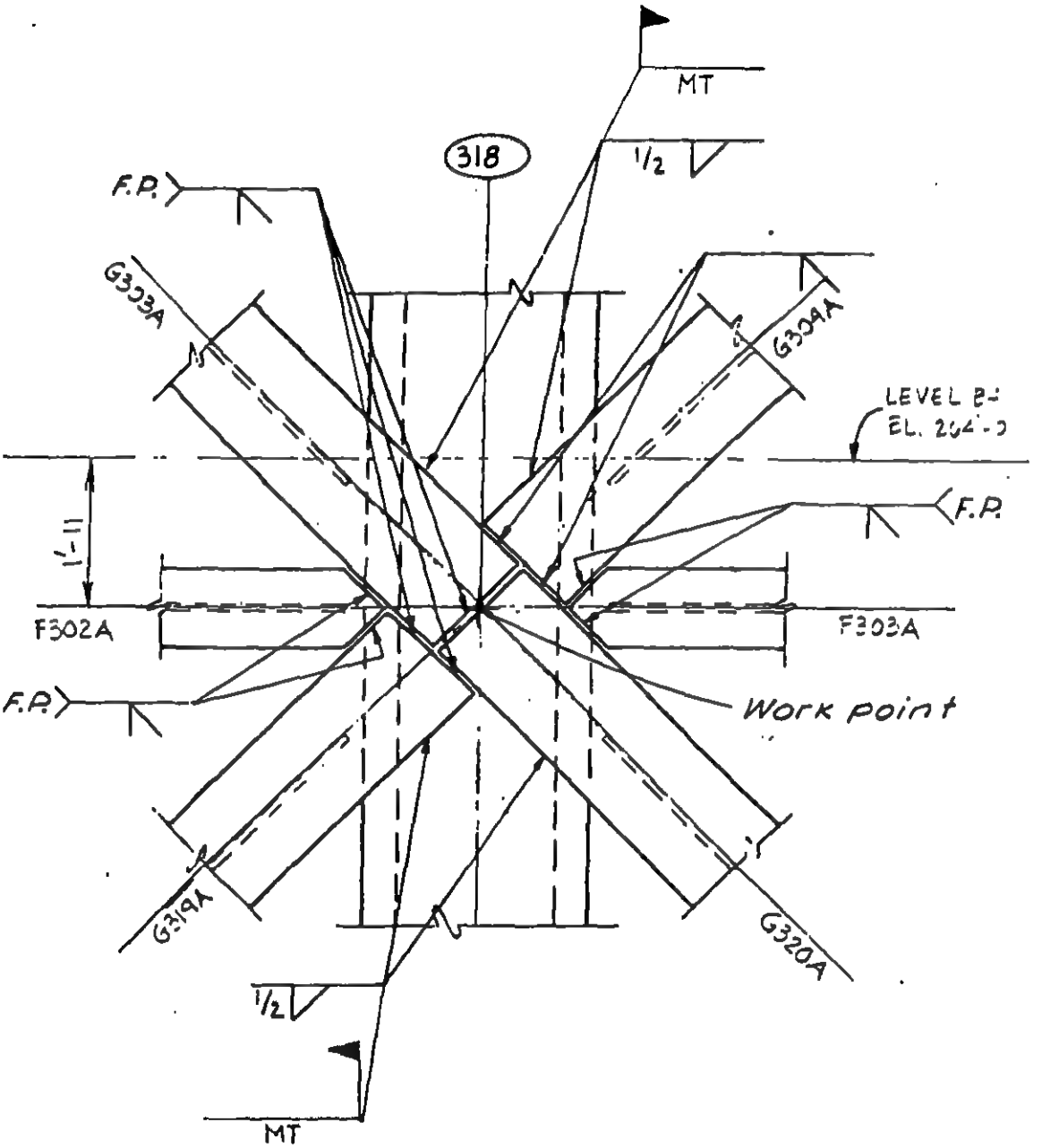

REV.	LERA LESLIE E. ROBERTSON ASSOCIATES CONSULTING STRUCTURAL ENGINEERS	P 100311B	DRAWING NO.
	WTC - STRUCTURAL INTEGRITY INVESTIGATION	DRAFT KEH	IN-71SW 3.4-9
	MAGNETIC PARTICLE TESTING CONNECTIONS	DESIGN	
		CHECK	15 JUNE 93

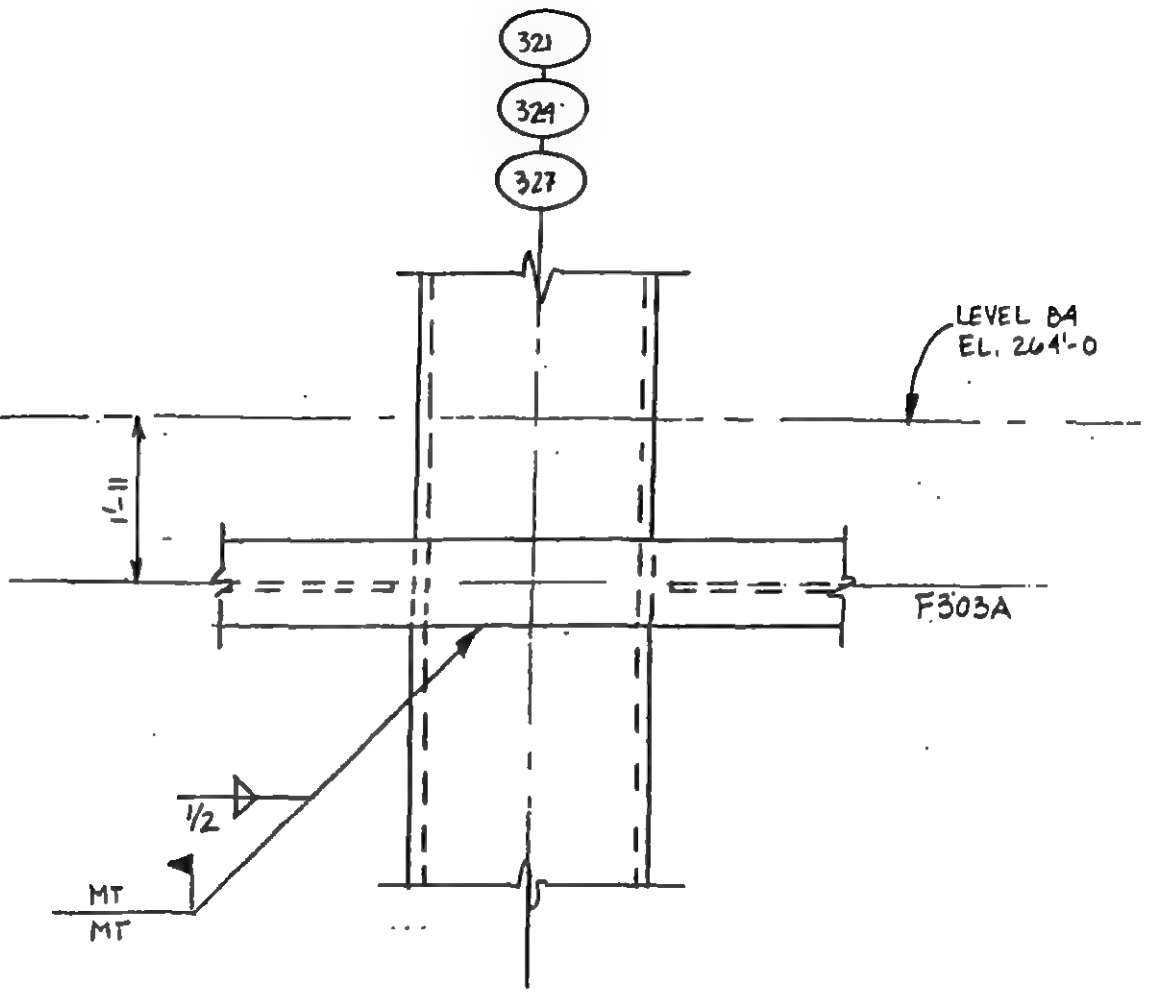

REV.	LERA LESLIE E. ROBERTSON ASSOCIATES CONSULTING STRUCTURAL ENGINEERS	P 1003118	DRAWING NO.
	WTC - STRUCTURAL INTEGRITY INVESTIGATION	DRAFT KEH	IN - T1SW 3.4-10
	MAGNETIC PARTICLE TESTING CONNECTIONS	DESIGN	
		CHECK	15 JUNE 93

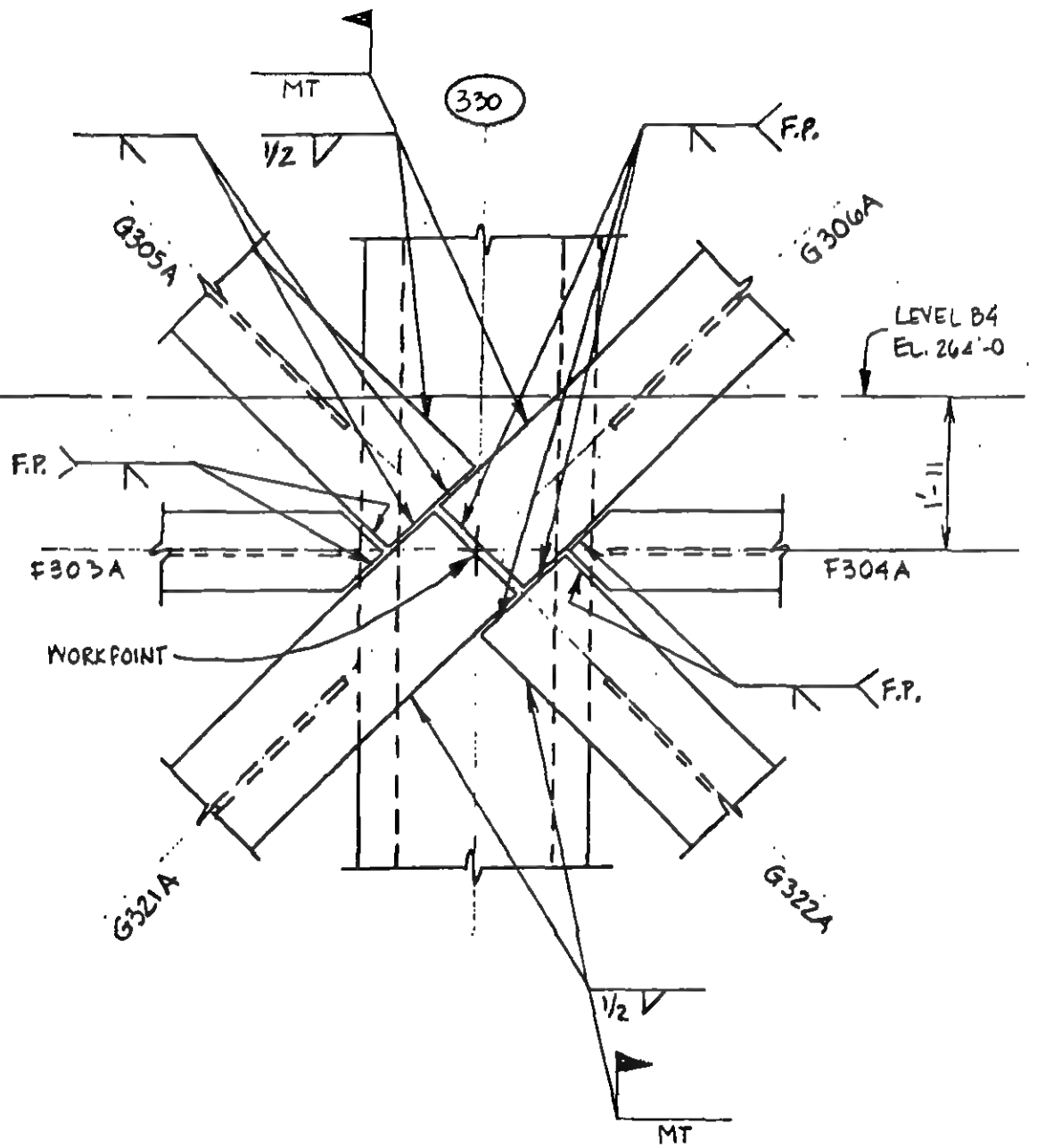

REV.	LERA LESLIE E. ROBERTSON ASSOCIATES CONSULTING STRUCTURAL ENGINEERS	P 1003118	DRAWING NO.
	WTC - STRUCTURAL INTEGRITY INVESTIGATION	DRAFT KEH	IN-T1SW 3.4-11
	MAGNETIC PARTICLE TESTING CONNECTIONS	DESIGN	
		CHECK	15 JUNE 93

A

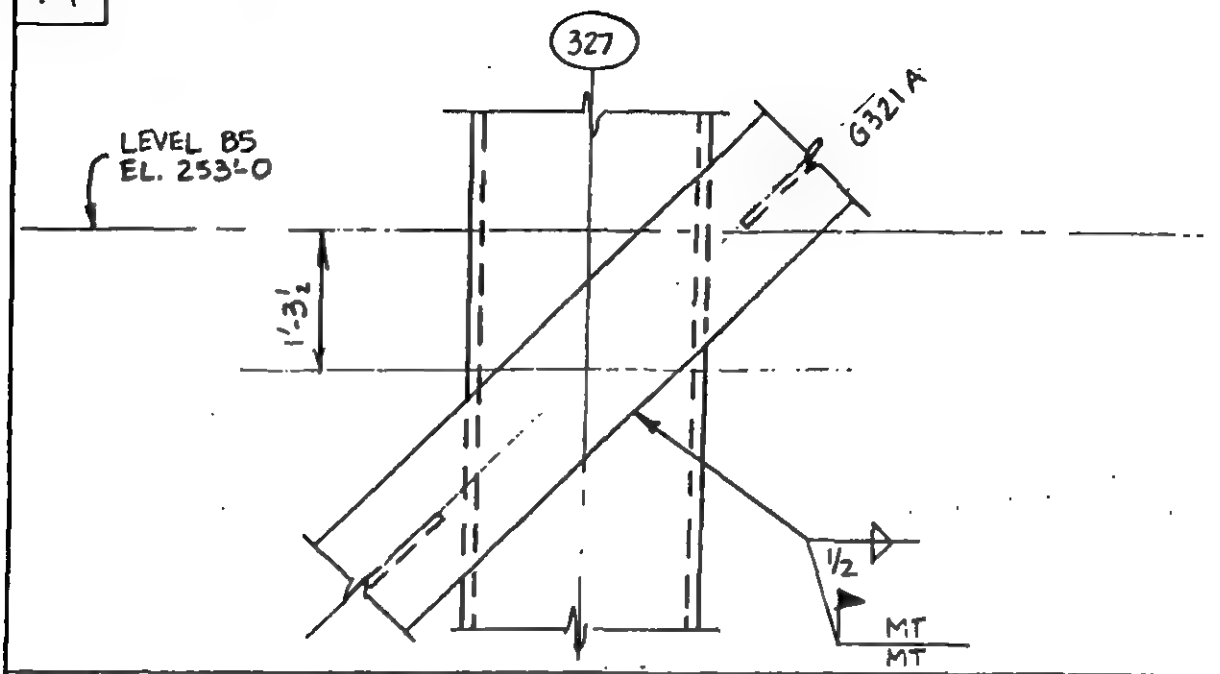

B

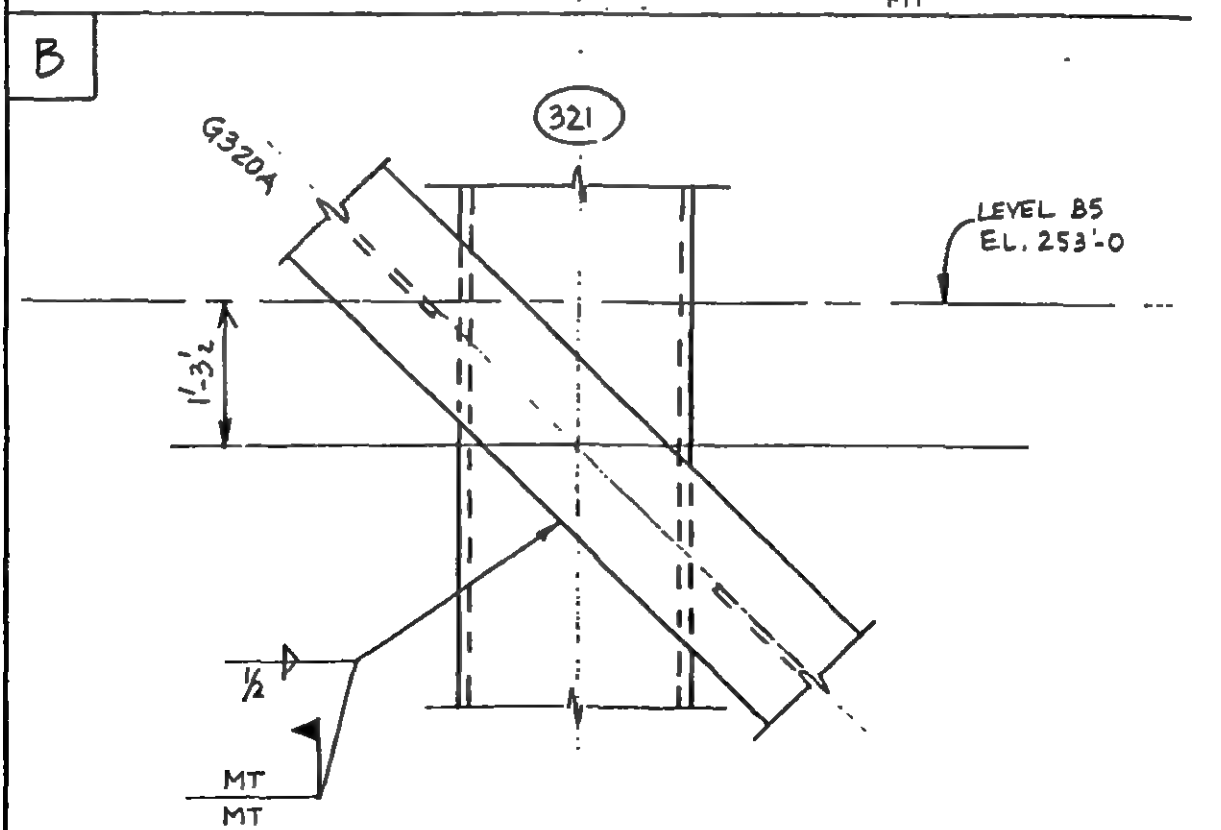

REV.	LERA LESLIE E. ROBERTSON ASSOCIATES CONSULTING STRUCTURAL ENGINEERS	P 1003119	DRAWING NO.
	WTC - STRUCTURAL INTEGRITY INVESTIGATION	DRAFT KEH	IN-T1SW
	MAGNETIC PARTICLE TESTING	DESIGN	3.4-12
	CONNECTIONS	CHECK	24 JUN 93

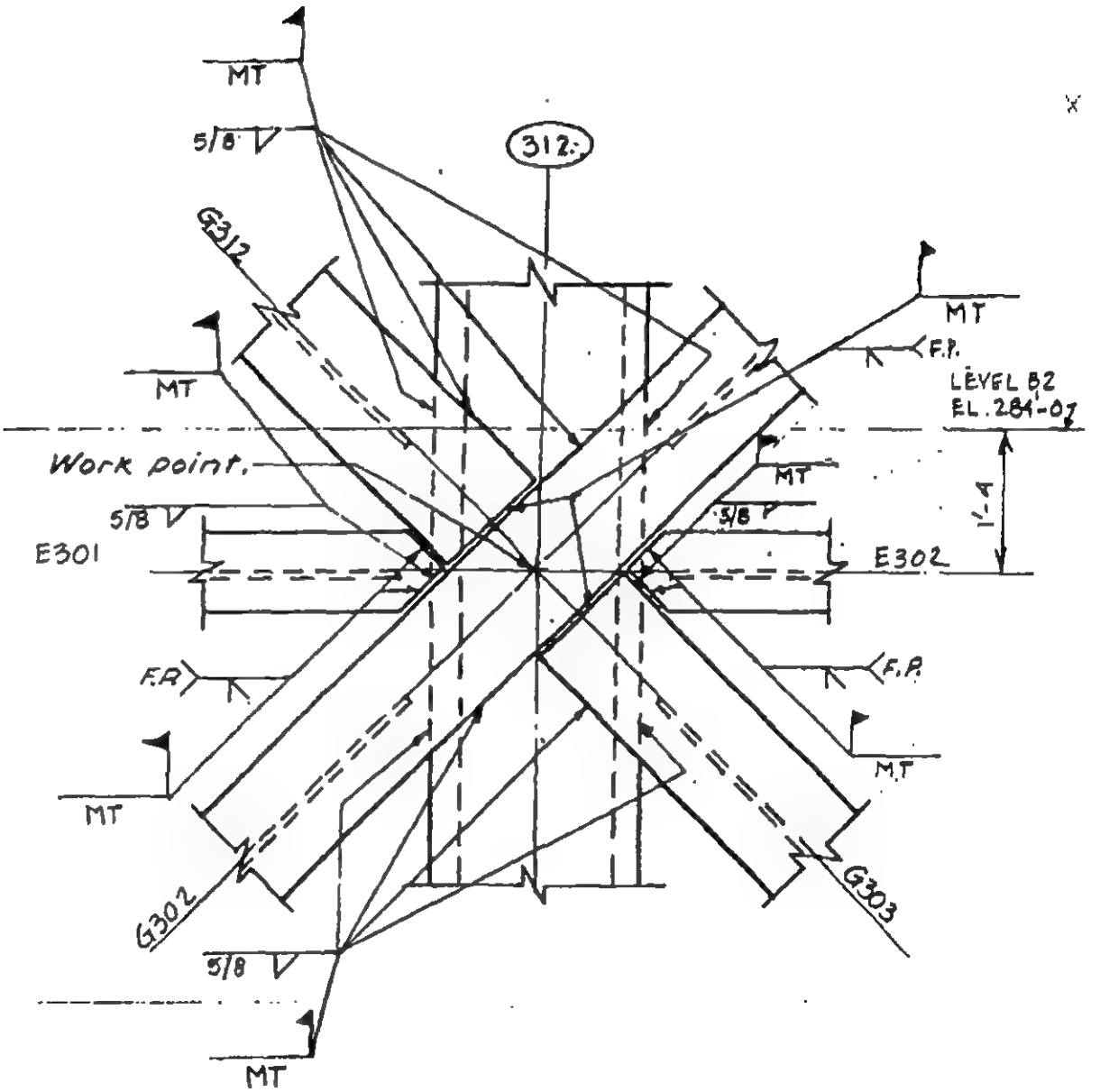

NOTE: TEST WELDS AS ACCESSIBLE

REV.	LERA LESLIE E. ROBERTSON ASSOCIATES CONSULTING STRUCTURAL ENGINEERS	P 1003119	DRAWING NO.
	WTC - STRUCTURAL INTEGRITY INVESTIGATION	DRAFT KEH	IN-T1SW
	MAGNETIC PARTICLE TESTING	DESIGN	3.4-13
	CONNECTIONS	CHECK	24 JUN 93

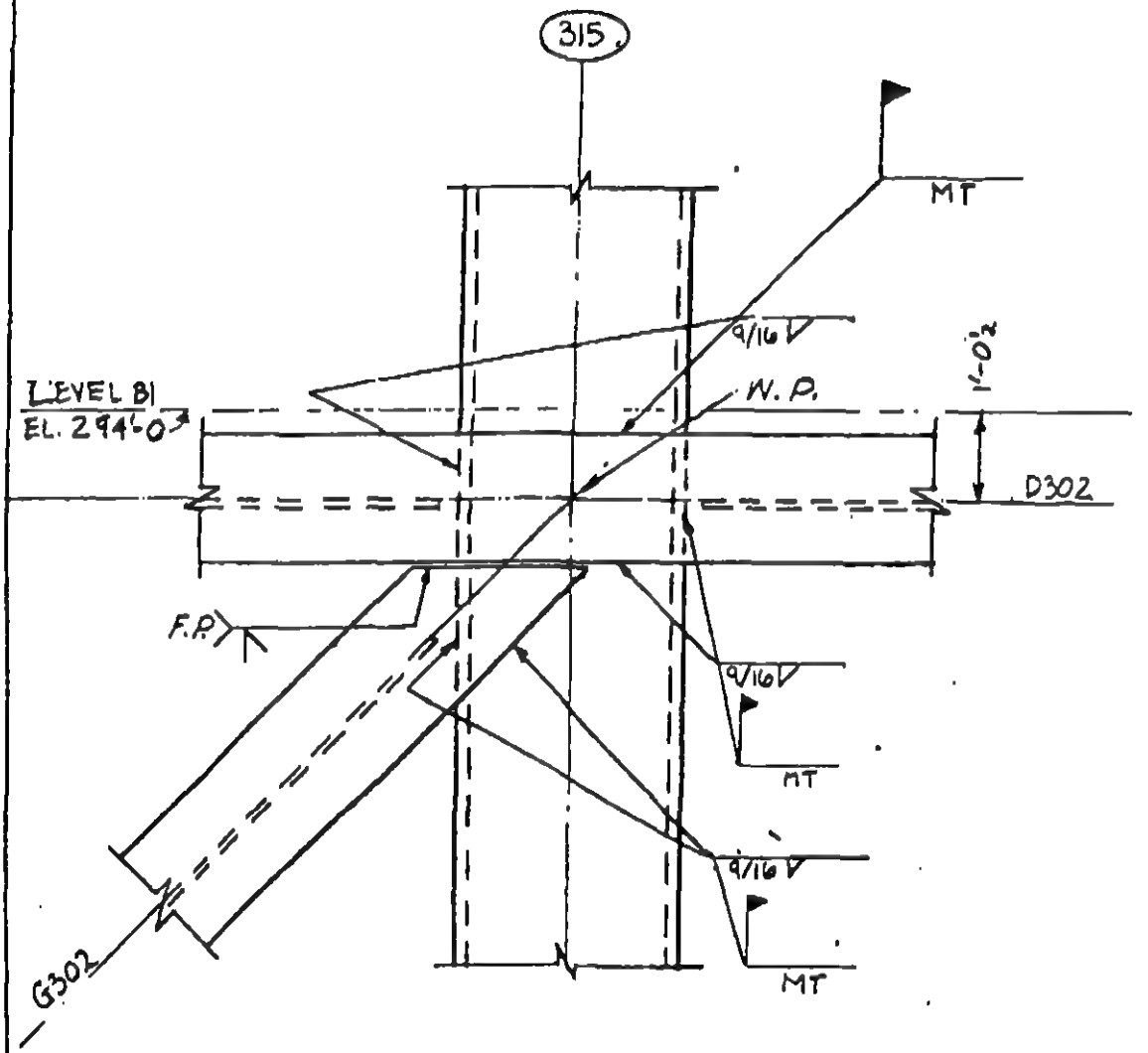

REV.	LERA LESLIE E. ROBERTSON ASSOCIATES CONSULTING STRUCTURAL ENGINEERS	P 1003119	DRAWING NO.
	WTC - STRUCTURAL INTEGRITY INVESTIGATION	DRAFT KEH	IN-T1SW
	MAGNETIC PARTICLE TESTING	DESIGN	3.4-14
	CONNECTIONS	CHECK	28 JUN 93

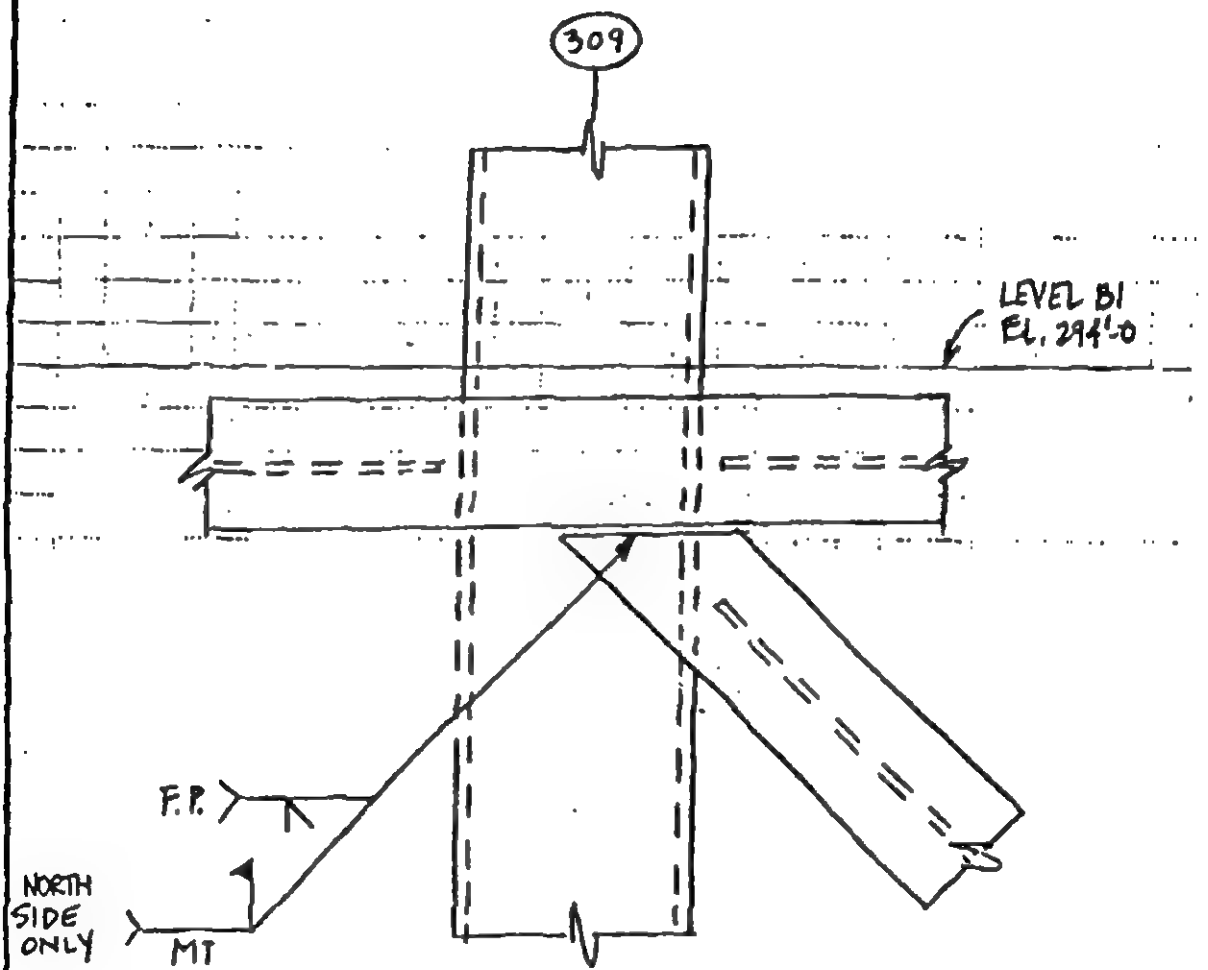

NORTH ELEVATION

CONFIDENTIAL

EXP 003658

RCV BY:LERA

REV.	LERA LESLIE E. ROBERTSON ASSOCIATES CONSULTING STRUCTURAL ENGINEERS	P 1003119	DRAWING NO. IN-TISN 3.4-15
	WTC-STRUCTURAL INTEGRITY INVESTIGATION	DRAFT KEH	
	MAGNETIC PARTICLE TESTING CONNECTIONS	DESIGN	
		CHECK	6 JUL 93

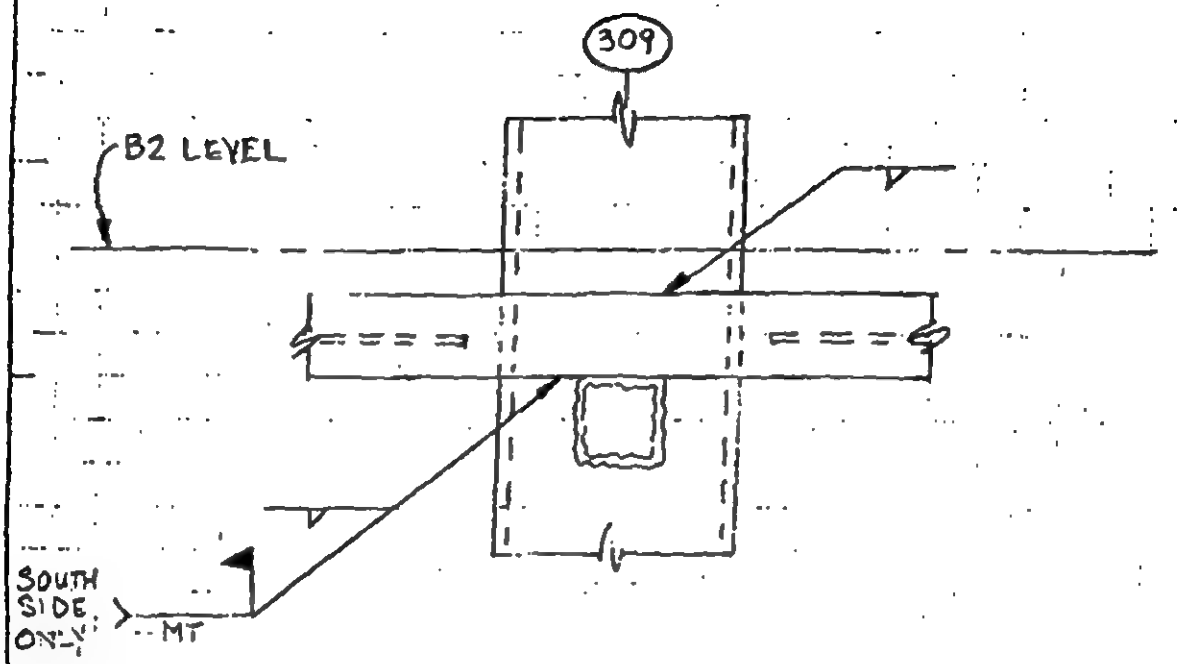

SOUTH ELEVATION

CONFIDENTIAL

EXP 003659

REV.	LERA LESLIE E. ROBERTSON ASSOCIATES CONSULTING STRUCTURAL ENGINEERS	P. 1003119	DRAWING NO.
1/11/94	WTC – STRUCTURAL INTEGRITY INVESTIGATION	DRAFT CG	IN-TISW
	MAGNETIC PARTICLE TESTING	DESIGN	3.4-16
	CONNECTIONS	CHECK	27 DEC 93

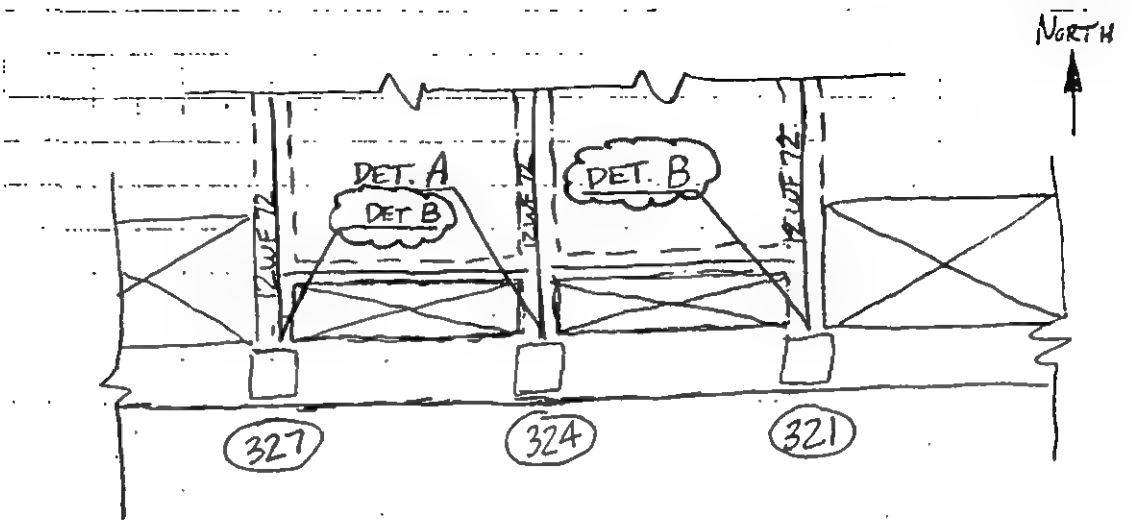

PART PLAN – B3 LEVEL (1 WTC)

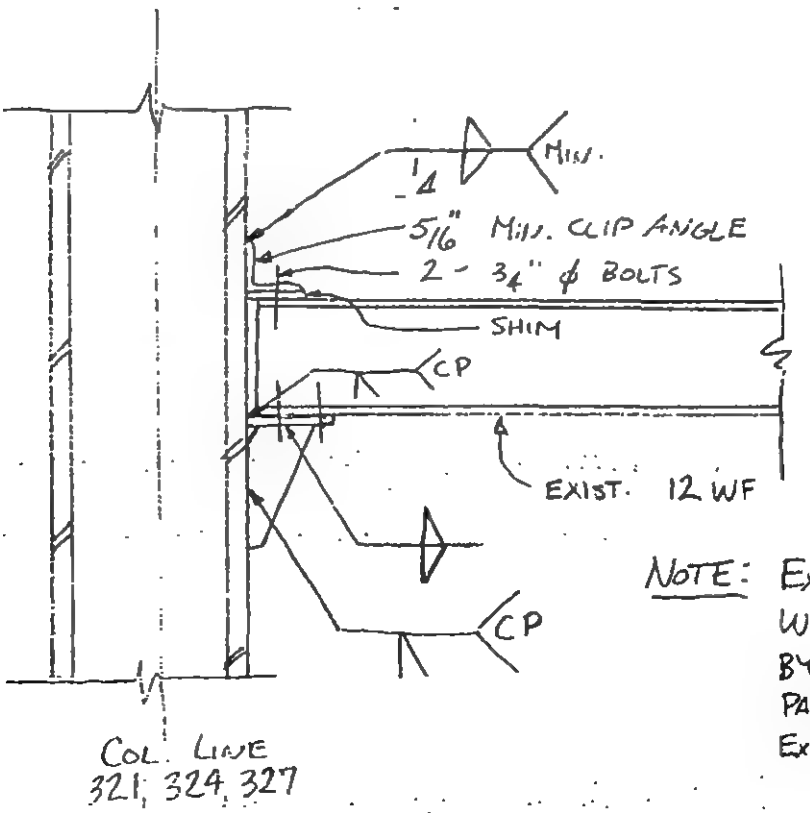

NOTE: EXAMINE ALL WELDS SHOWN BY MAGNETIC PARTICLE EXAMINATION.

DETAIL A

REV.	LERA LESLIE E. ROBERTSON ASSOCIATES CONSULTING STRUCTURAL ENGINEERS	P 1003119	DRAWING NO.
	WTC - STRUCTURAL INTEGRITY INVESTIGATION	DRAFT CG	IV-TISW 3.4-17
	MAGNETIC PARTICLE TESTING CONNECTIONS	DESIGN	
		CHECK	11 JAN 94

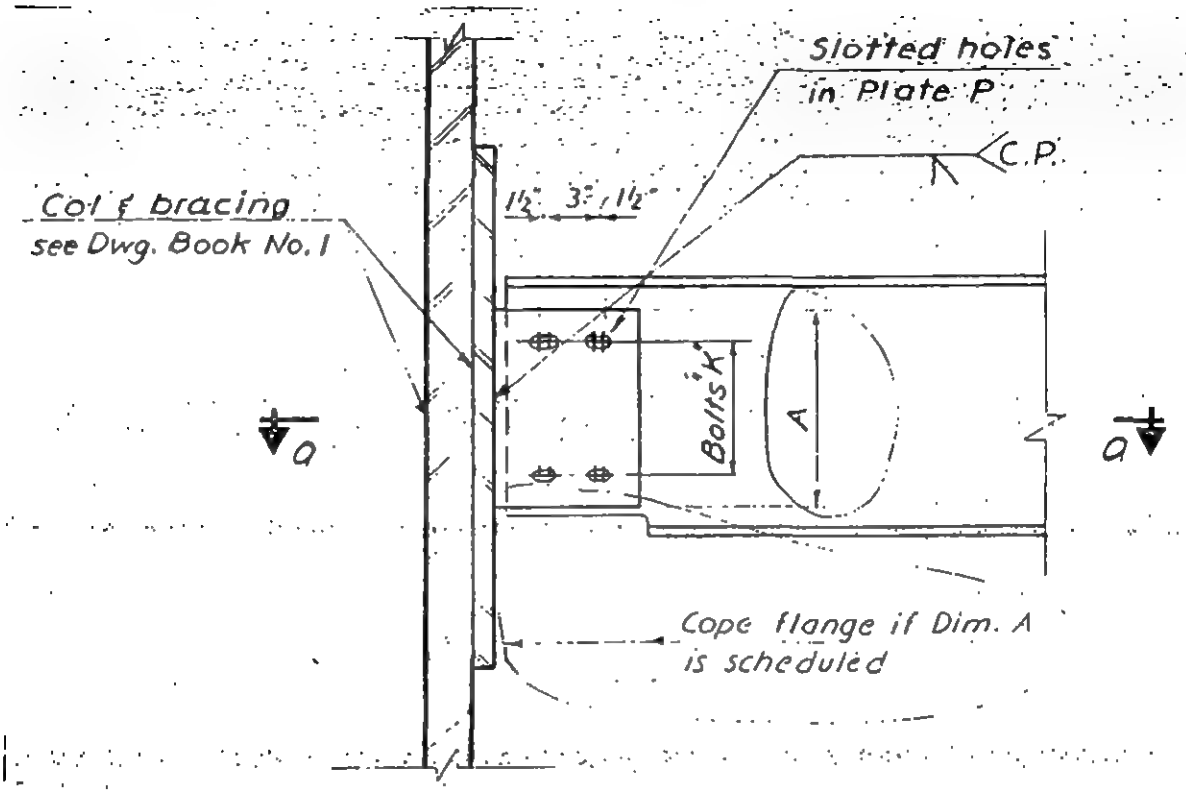

DETAIL B

NOTE: EXAMINE ALL WELDS SHOWN BY MAGNETIC PARTICLE EXAMINATION.

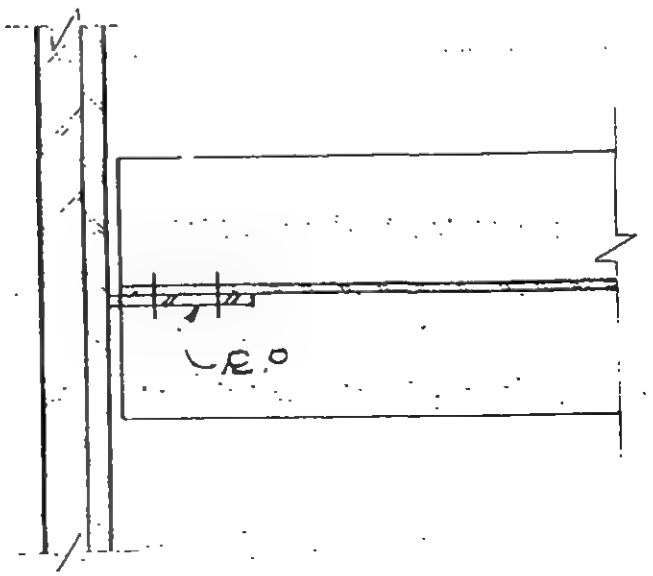

SECTION a-a

REV.	LERA LESLIE E. ROBERTSON ASSOCIATES CONSULTING STRUCTURAL ENGINEERS	P 100319	DRAWING NO.
	WTC - STRUCTURAL INTEGRITY	DRAFT CG	IN-TICN 3-4-18
	MAGNETIC PARTICLE TESTING	DESIGN	
	CONNECTIONS	CHECK	11 JAN 94

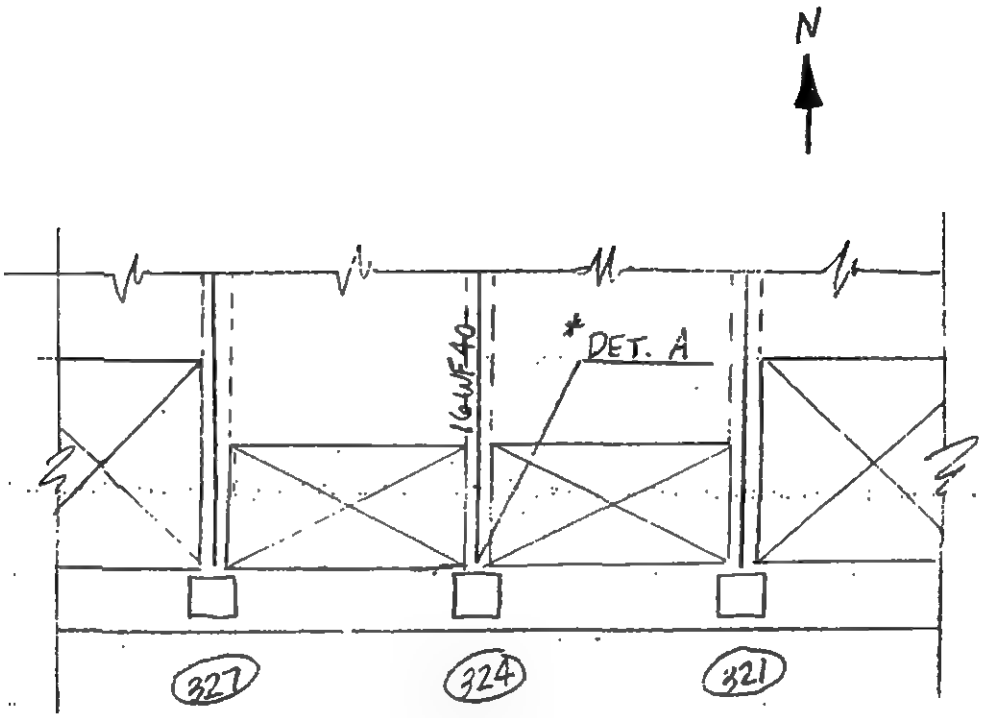

PART PLAN - B4 LEVEL (1WTC)

*NOTE: CLEAN AND REMOVE FIREPROOFING AND CONCRETE TO INSPECT CONNECTION.

REV.	LERA LESLIE E. ROBERTSON ASSOCIATES CONSULTING STRUCTURAL ENGINEERS	P 1003119	DRAWING NO.
	WTC - STRUCTURAL INTEGRITY INVESTIGATION	DRAFT CG	IN-TISW 3.4-19
	MAGNETIC PARTICLE TESTING CONNECTIONS	DESIGN	
		CHECK	11 JAN 94

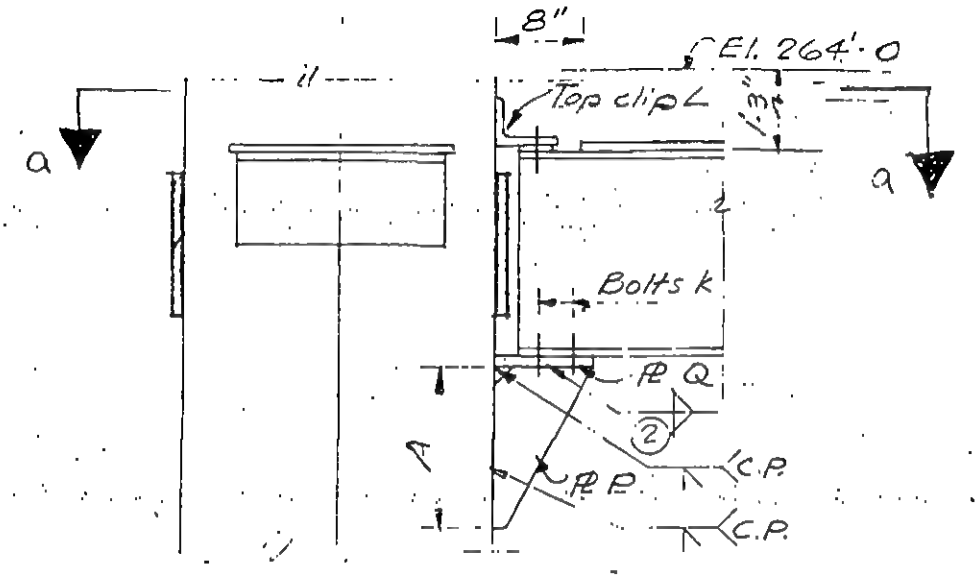

DETAIL A

NOTE: EXAMINE ALL WELDS SHOWN BY MAGNETIC PARTICLE EXAMINATION.

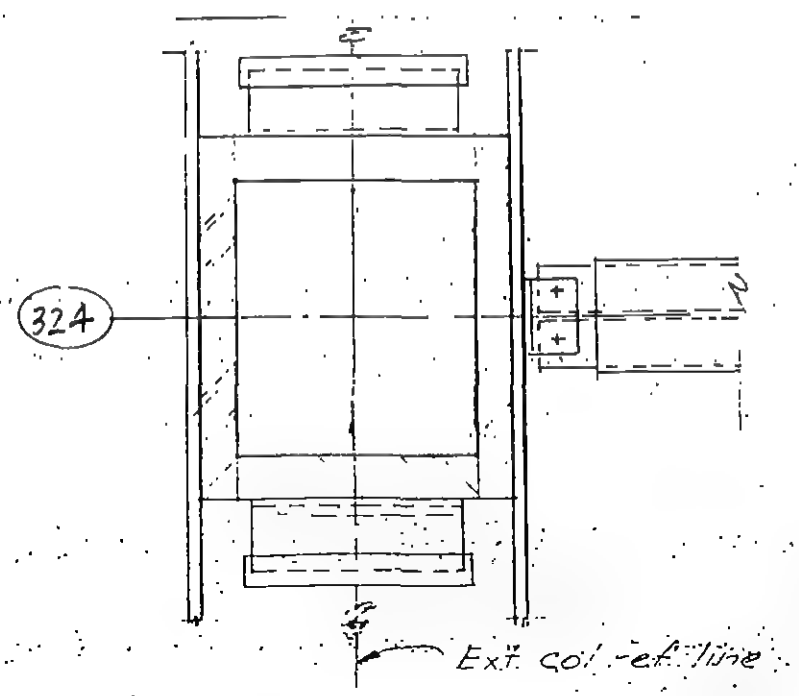

SECTION a-a

REV.	LERA LESLIE E. ROBERTSON ASSOCIATES CONSULTING STRUCTURAL ENGINEERS	P 1003119	DRAWING NO.
	WTC - STRUCTURAL INTEGRITY INVESTIGATION	DRAFT CG	IN-TISW
	MAGNETIC PARTICLE TESTING	DESIGN	3.4-20
	CONNECTIONS	CHECK	12 JAN 94

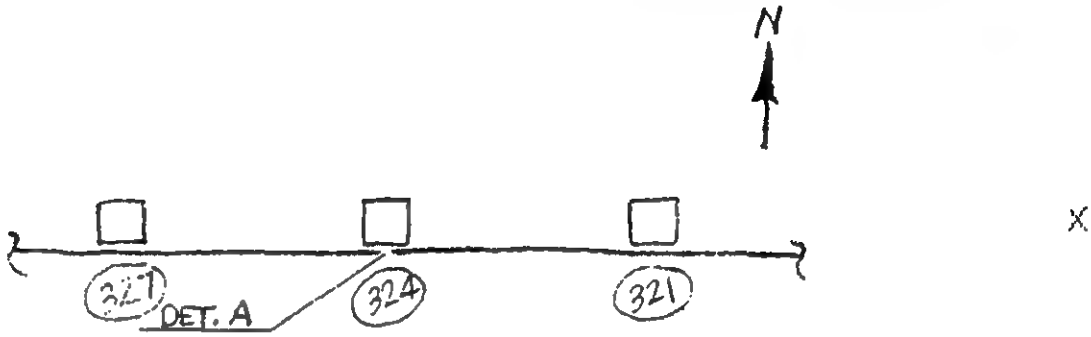

PART PLAN - B5 LEVEL, TOWER 1 (ELEV. 257'-0)

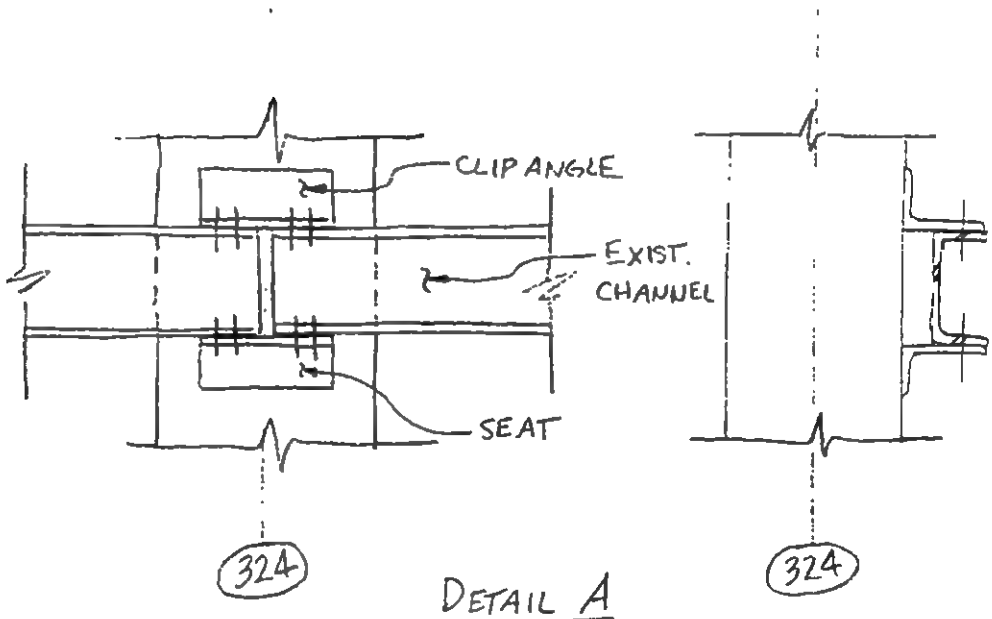

DETAIL A

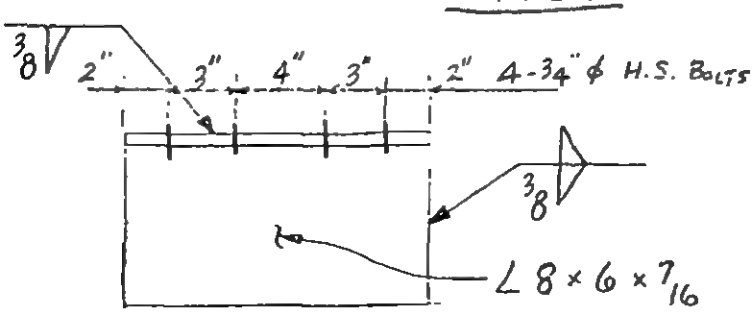

SEAT FOR DET. A
(REVERSE = CLIP FOR DET. A)

NOTE: EXAMINE CONNECTION SHOWN. EXAMINE ALL WELDS BY MAGNETIC PARTICLE EXAMINATION.

REV.	LERA LESLIE E. ROBERTSON ASSOCIATES CONSULTING STRUCTURAL ENGINEERS	P 1003119	DRAWING NO. IN-TISW 3.5-1
	WTC-STRUCTURAL INTEGRITY INVESTIGATION	DRAFT KEH	
	MAGNETIC PARTICLE TESTING	DESIGN	
	COLUMNS	CHECK	28 JUN 93

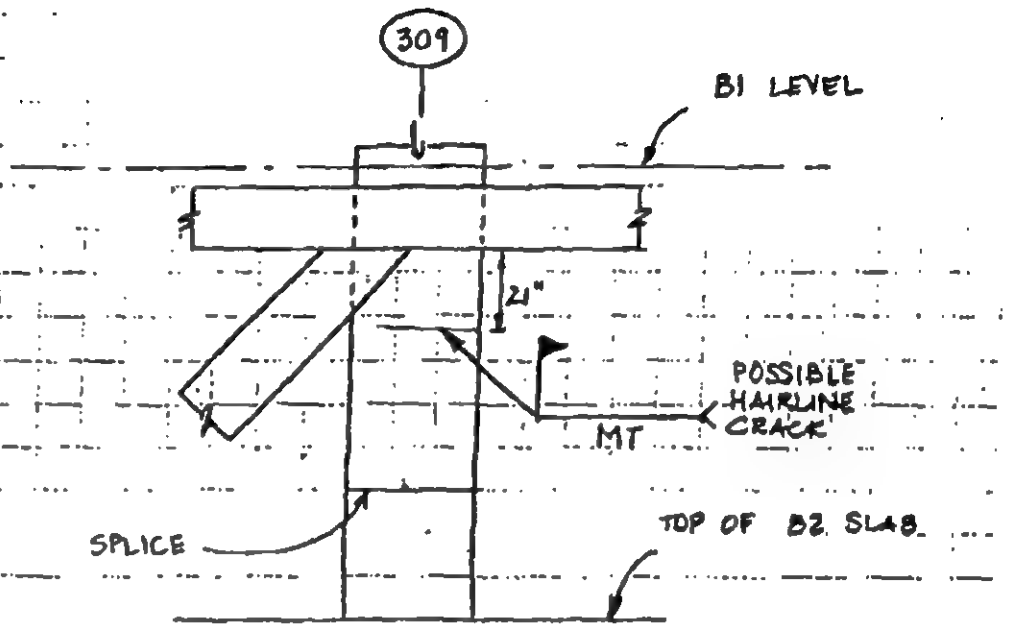

SOUTH ELEVATION

REV.	LERA LESLIE E. ROBERTSON ASSOCIATES CONSULTING STRUCTURAL ENGINEERS	P 003119	DRAWING NO. IN-TISW 3.6-1
	WTC - STRUCTURAL INTEGRITY INVESTIGATION	DRAFT KEH	
	MAGNETIC PARTICLE TESTING SPANDRELS	DESIGN	
		CHECK	28 JUNE 93

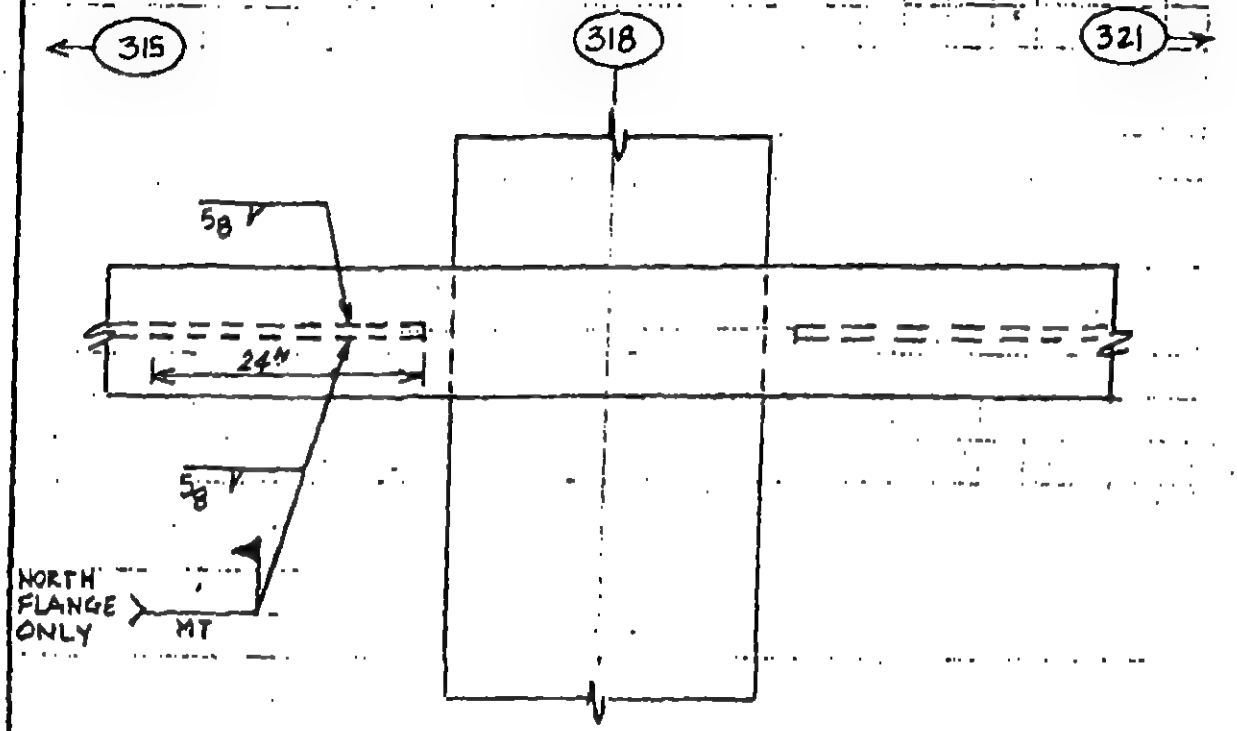

NORTH ELEVATION

ONFIDENTIAL

REV.	LERA LESLIE E. ROBERTSON ASSOCIATES CONSULTING STRUCTURAL ENGINEERS	P 1003119	DRAWING NO.
	WTC - STRUCTURAL INTEGRITY INVESTIGATION	DRAFT KEH	IN-TISW 3.6-2
	MAGNETIC PARTICLE TESTING SPANDRELS	DESIGN	
		CHECK	1 JUL 93

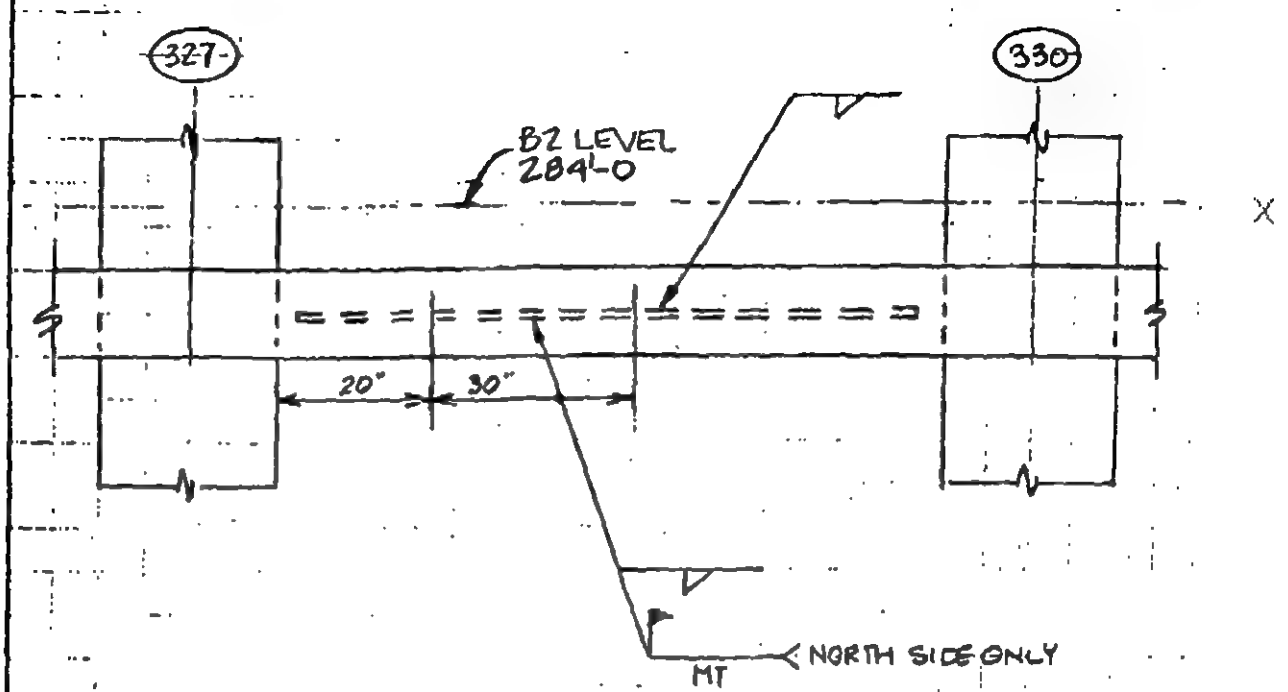

REV.	LERA LESLIE E. ROBERTSON ASSOCIATES CONSULTING STRUCTURAL ENGINEERS	P 1003119	DRAWING NO.
	WTC - STRUCTURAL INTEGRITY INVESTIGATION	DRAFT KEH	IN-TISW 3.6-3
	MAGNETIC PARTICLE TESTING	DESIGN	
	SPANDRELS	CHECK	15 JUL 93

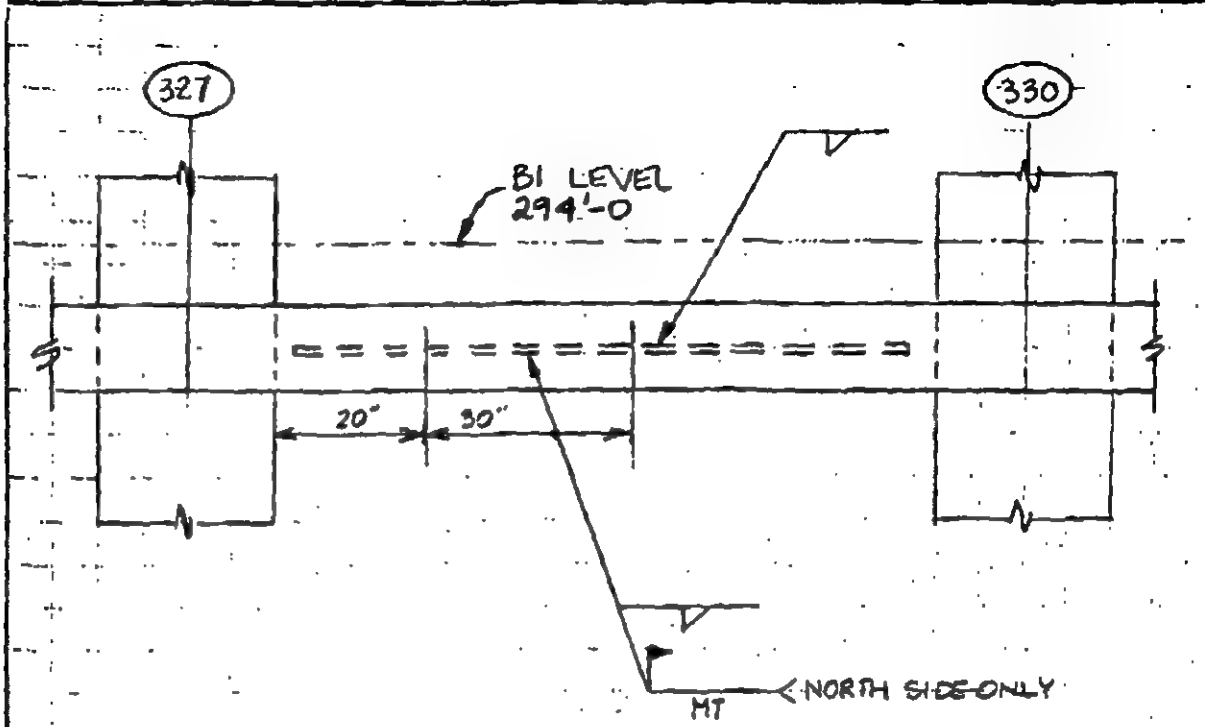

ONFIDENTIAL

REV.	LERA LESLIE E. ROBERTSON ASSOCIATES CONSULTING STRUCTURAL ENGINEERS	P 1C03118	DRAWING NO.
	WTC - STRUCTURAL INTEGRITY INVESTIGATION	DRAFT KEH	IN - T1SW
	ULTRASONIC TESTING COLUMNS	DESIGN	4.2-1
		CHECK	15 JUNE 93

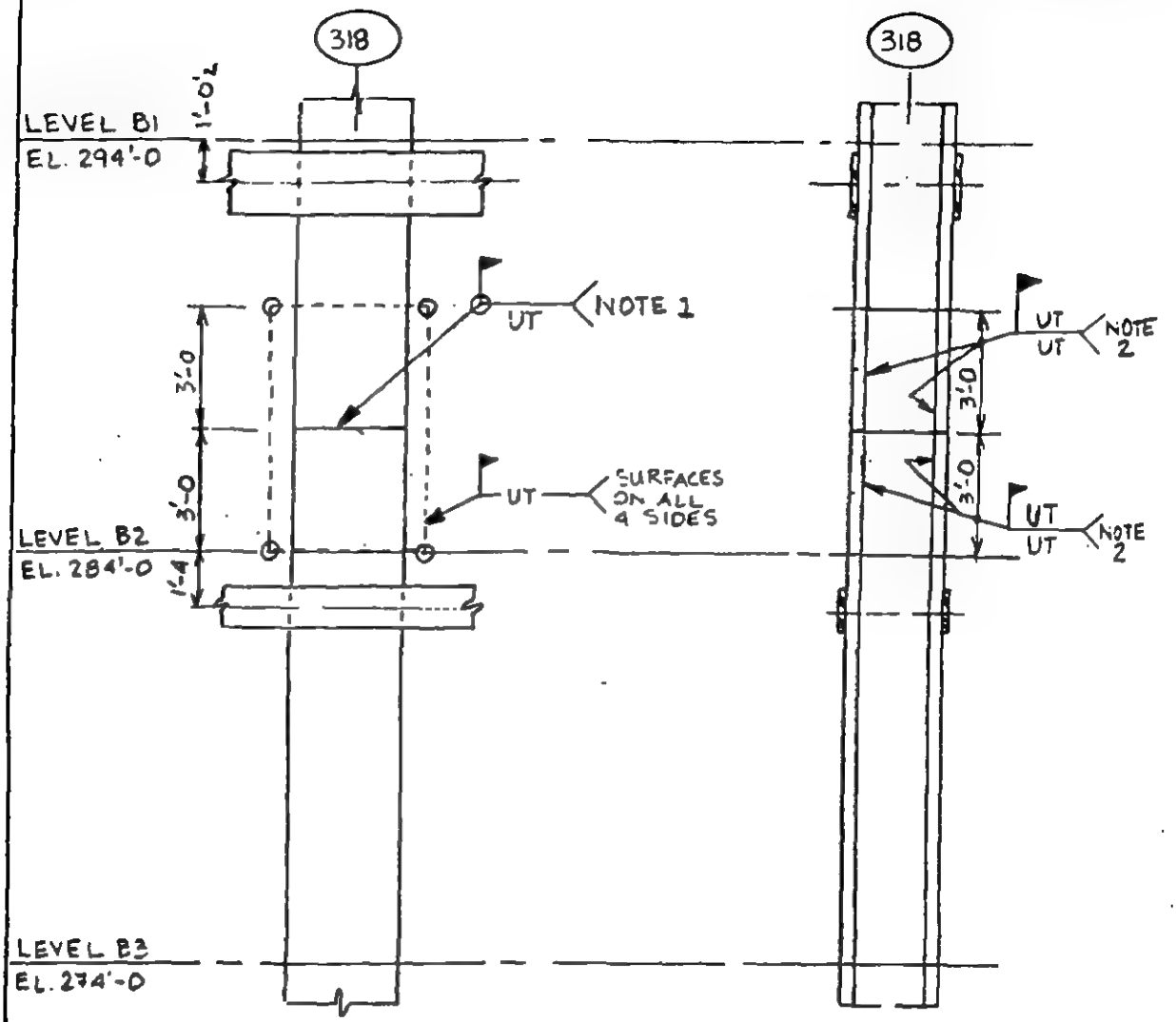

NOTE 1 - SEE IN-T1SW-3.3-2 FOR EXISTING WELDS AT COLUMN SPLICE

NOTE 2 - SEE IN-T1SW-3.2-3 FOR EXISTING COLUMN ASSEMBLY WELDS

REV.	LERA LESLIE E. ROBERTSON ASSOCIATES CONSULTING STRUCTURAL ENGINEERS	P 003118	DRAWING NO.
	WTC - STRUCTURAL INTEGRITY INVESTIGATION	DRAFT KEH	IN-T1SW
	ULTRASONIC TESTING COLUMNS	DESIGN	4.2-2
		CHECK	15 JUNE 93

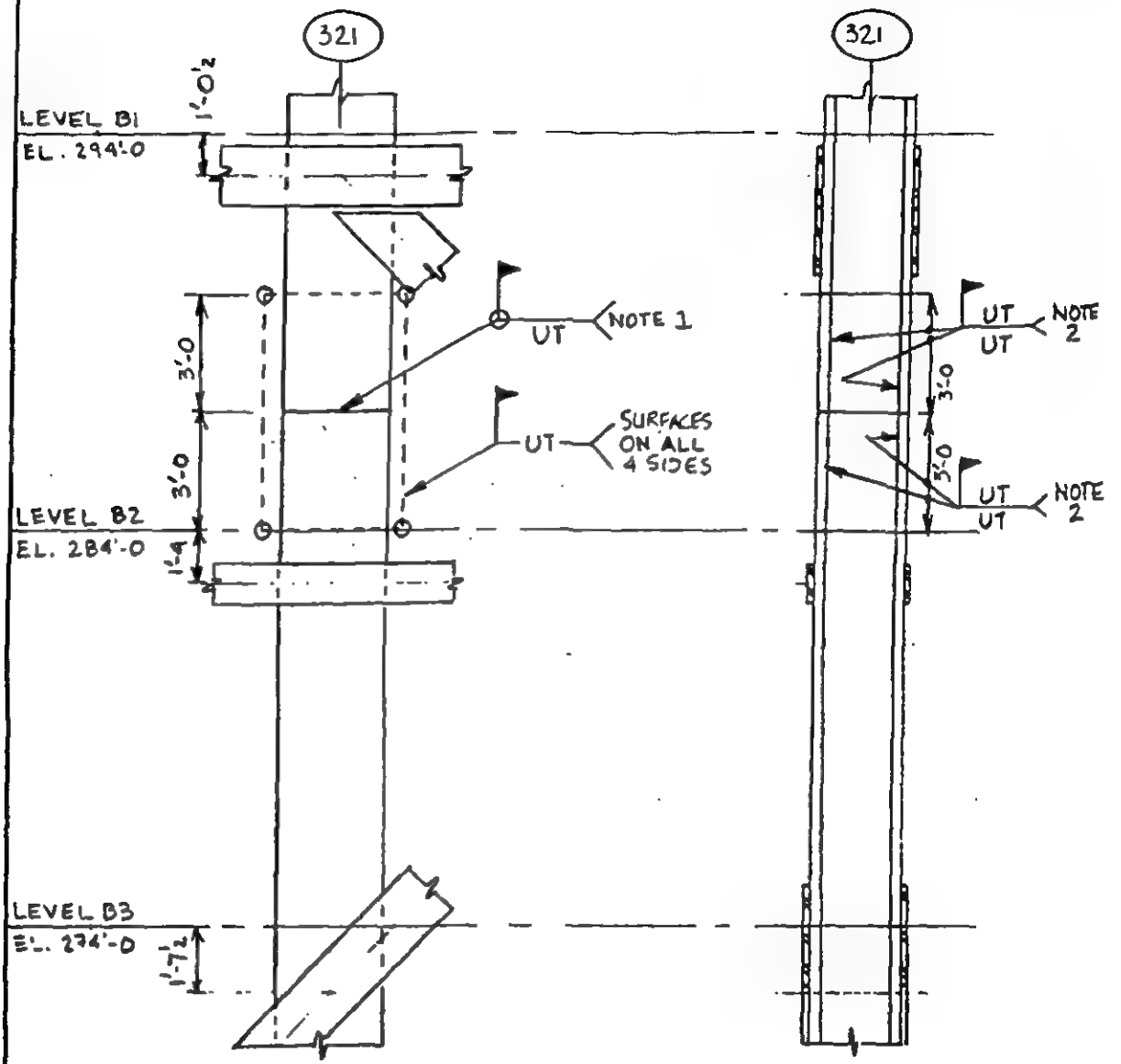

NOTE 1 - SEE IN-T1SW - 3.3-2 FOR EXISTING WELDS AT COLUMN SPLICE

NOTE 2 - SEE IN-T1SW - 3.2-3 FOR EXISTING COLUMN ASSEMBLY WELDS

REV.	LERA LESLIE E. ROBERTSON ASSOCIATES CONSULTING STRUCTURAL ENGINEERS	P 1003118	DRAWING NO.
	WTC - STRUCTURAL INTEGRITY INVESTIGATION	DRAFT KEH	IN-T1SW 4.2-3
	ULTRASONIC TESTING COLUMNS	DESIGN	
		CHECK	15 JUNE 93

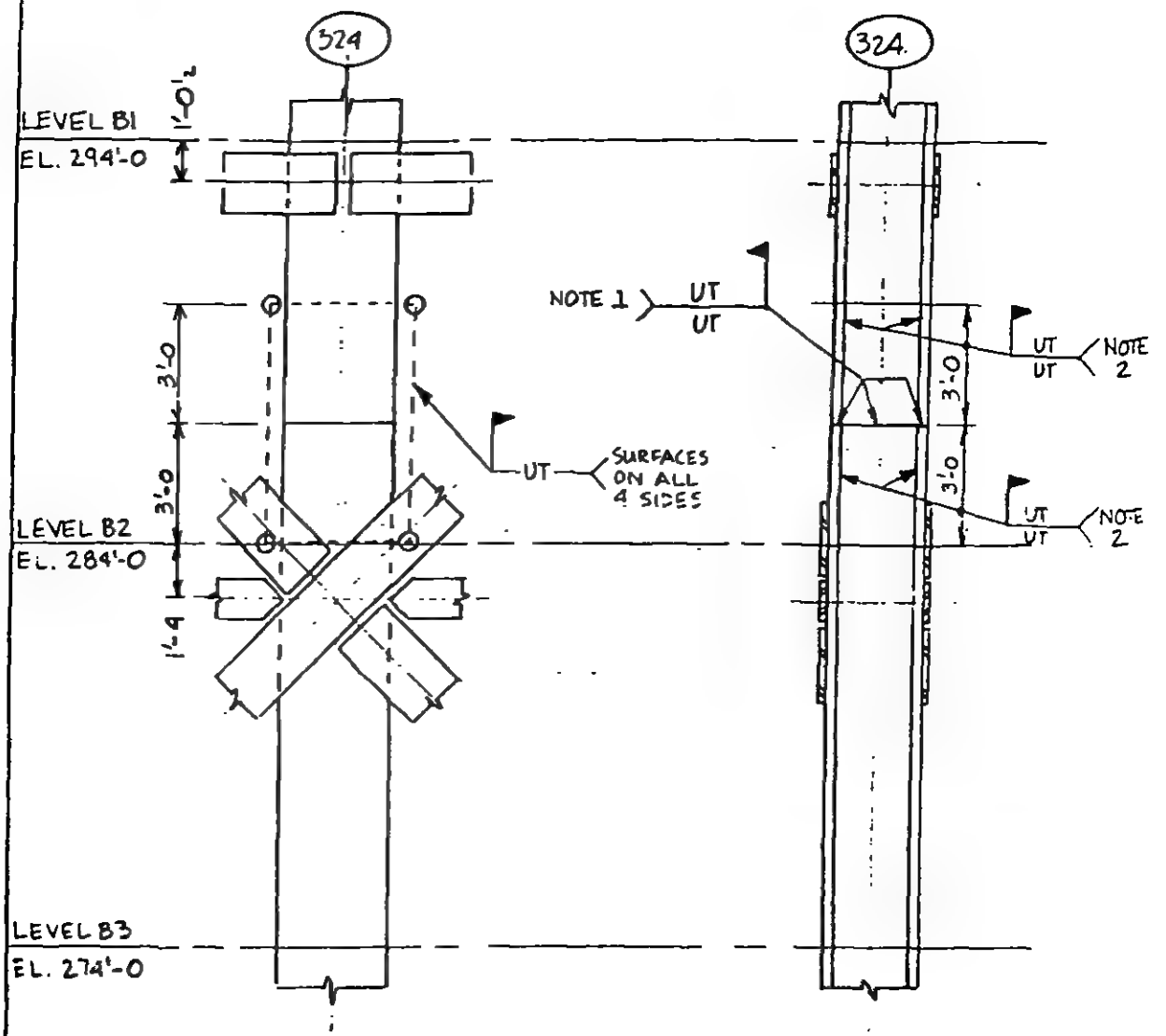

NOTE 1 - SEE IN-T1SW-3.3-2 FOR EXISTING WELDS AT COLUMN SPLICE

NOTE 2 - SEE IN-T1SW-3.2-3 FOR EXISTING COLUMN ASSEMBLY WELDS

REV.	LERA LESLIE E. ROBERTSON ASSOCIATES CONSULTING STRUCTURAL ENGINEERS	P 1003118	DRAWING NO. IN-TISW 4.2-4
	WTC - STRUCTURAL INTEGRITY INVESTIGATION	DRAFT KEH	
	ULTRASONIC TESTING COLUMNS	DESIGN	
		CHECK	15 JUNE 93

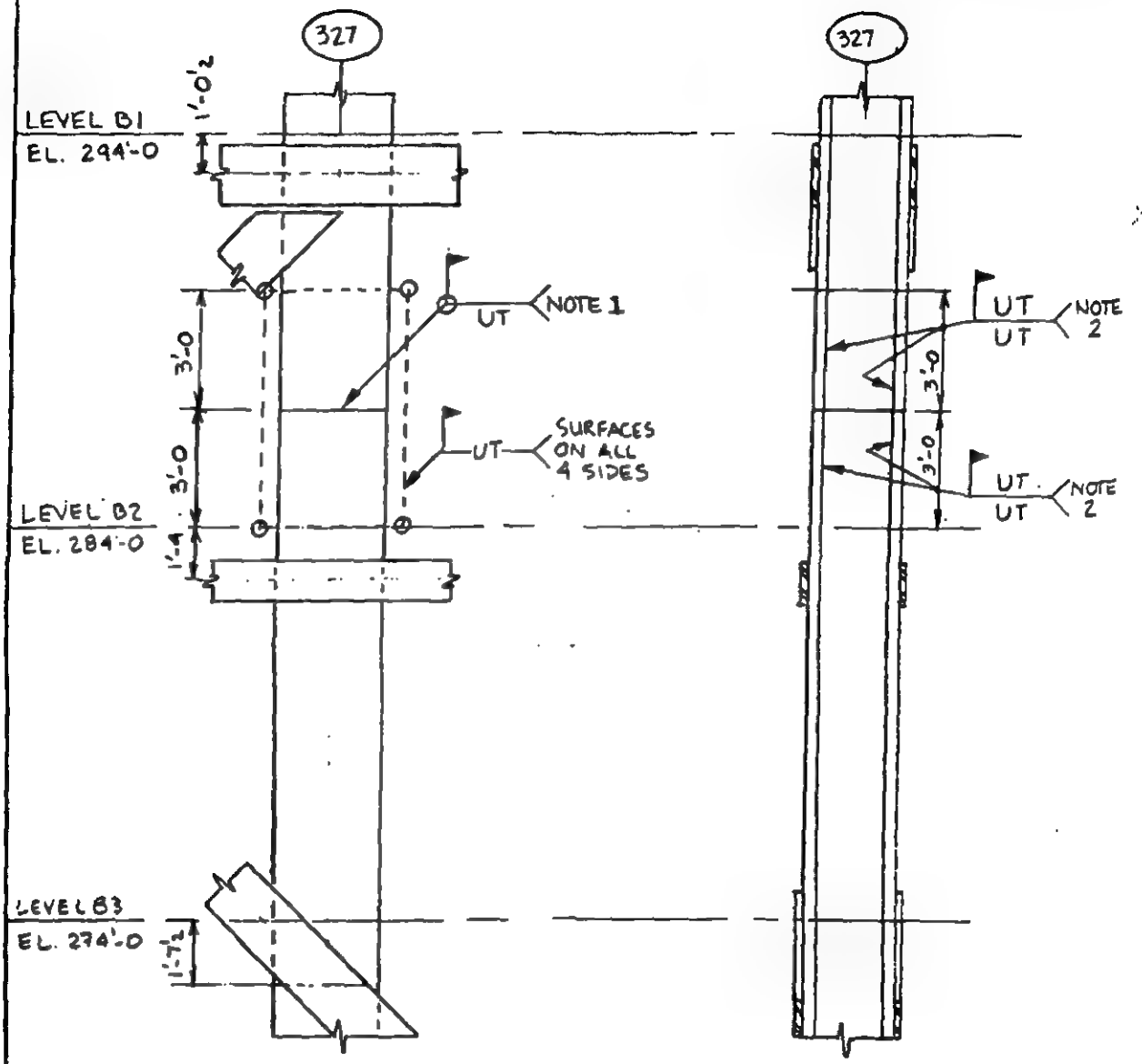

NOTE 1 - SEE IN-TISW - 3.3-2 FOR EXISTING WELDS AT COLUMN SPLICE

NOTE 2 - SEE IN-TISW - 3.2-3 FOR EXISTING COLUMN ASSEMBLY WELDS

REV.	LERA LESLIE E. ROBERTSON ASSOCIATES CONSULTING STRUCTURAL ENGINEERS	P 1003118	DRAWING NO.
	WTC - STRUCTURAL INTEGRITY INVESTIGATION	DRAFT KEH	IN-T1SW 4.2-5
	ULTRASONIC TESTING COLUMNS	DESIGN	
		CHECK	15 JUNE 93

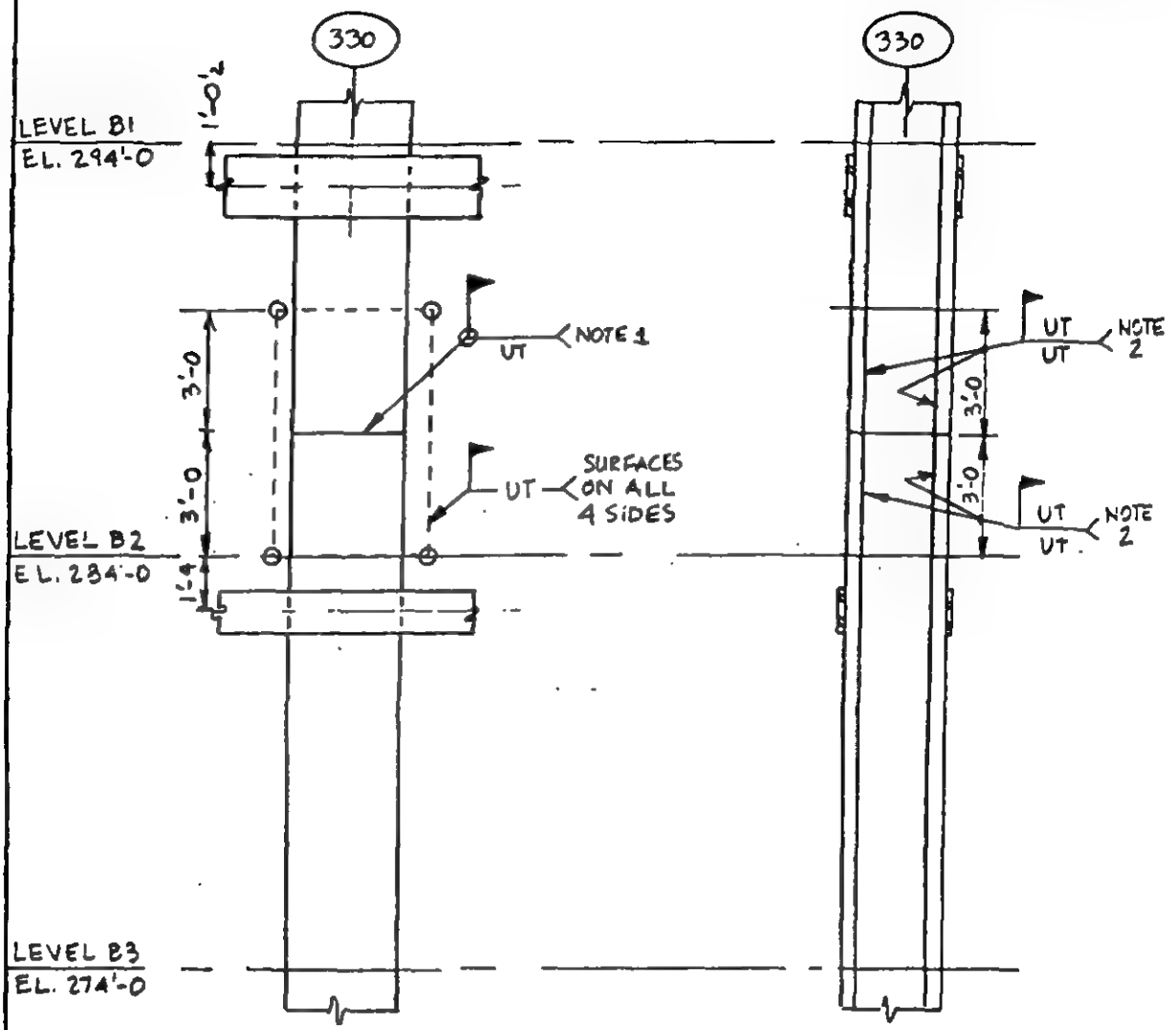

NOTE 1 - SEE IN-T1SW-3.3-2 FOR EXISTING WELDS AT COLUMN SPLICE.

NOTE 2 - SEE IN-T1SW-3.2-3 FOR EXISTING COLUMN ASSEMBLY WELDS.

RCV BY:LERA

REV.	LERA LESLIE E. ROBERTSON ASSOCIATES CONSULTING STRUCTURAL ENGINEERS	P 1003119	DRAWING NO.
	WTC-STRUCTURAL INTEGRITY INVESTIGATION	DRAFT KEH	IN-TISW
	ULTRASONIC TESTING	DESIGN	4.2-6
	COLUMNS	CHECK	6 JUL 93

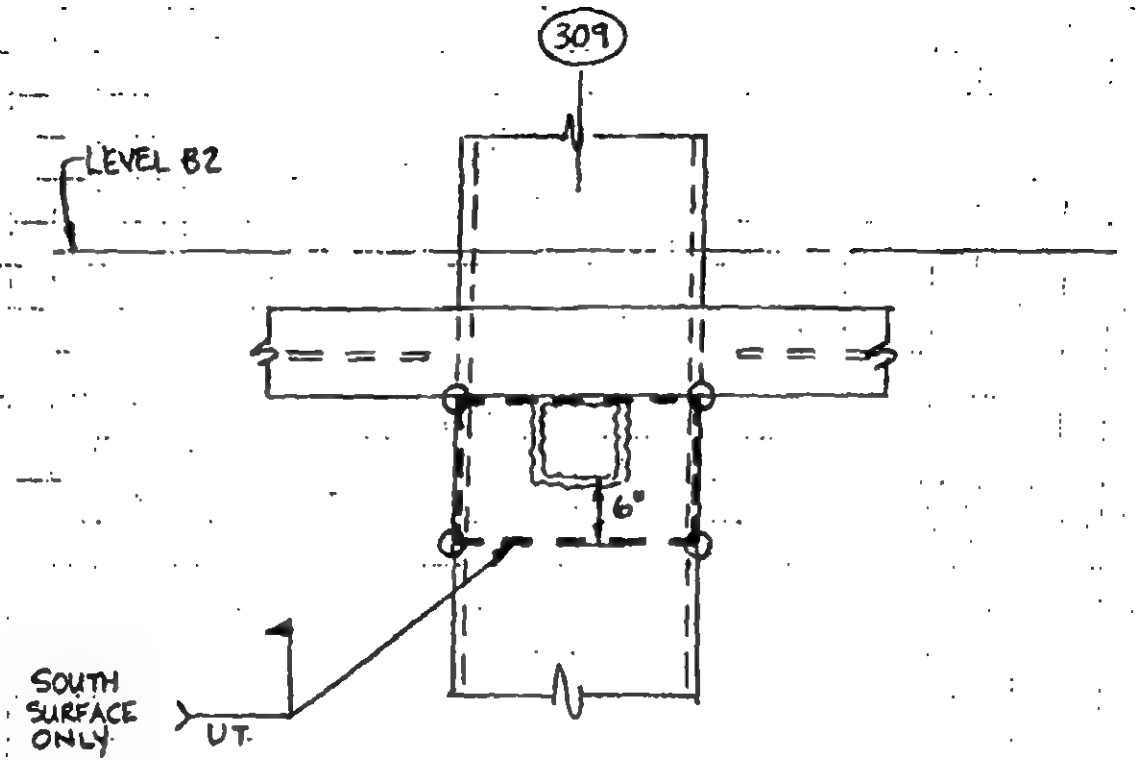

SOUTH ELEVATION

CONFIDENTIAL

EXP 003674

REV.	LERA LESLIE E. ROBERTSON ASSOCIATES CONSULTING STRUCTURAL ENGINEERS	P 1003119	DRAWING NO.
	WTC-STRUCTURAL INTEGRITY INVESTIGATION	DRAFT KEH	IN-TISW
	ULTRASONIC TESTING COLUMNS	DESIGN	4.2-7
		CHECK	7 JUL 93

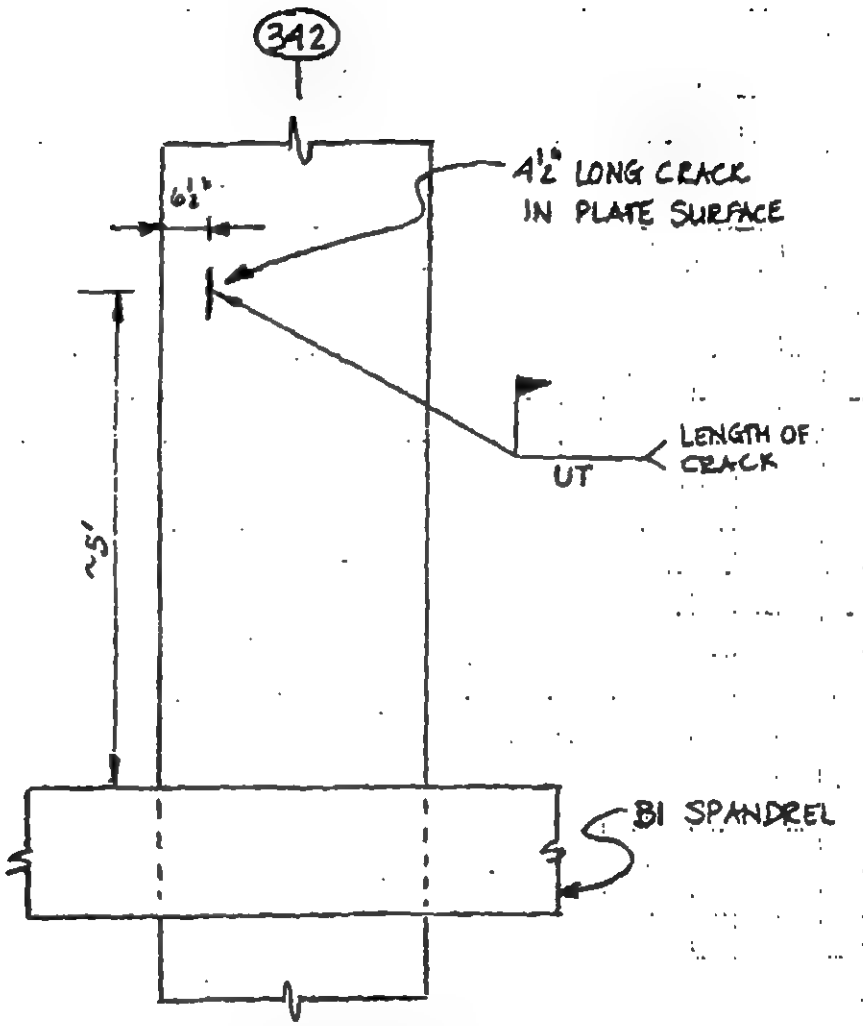

SOUTH ELEVATION

ONFIDENTIAL

REV.	LERA LESLIE E. ROBERTSON ASSOCIATES CONSULTING STRUCTURAL ENGINEERS	P 1003118	DRAWING NO. IN-T1SW 4.3-1
	WTC - STRUCTURAL INTEGRITY INVESTIGATION	DRAFT KEH	
	ULTRASONIC TESTING CONNECTIONS	DESIGN	
		CHECK	15 JUNE 93

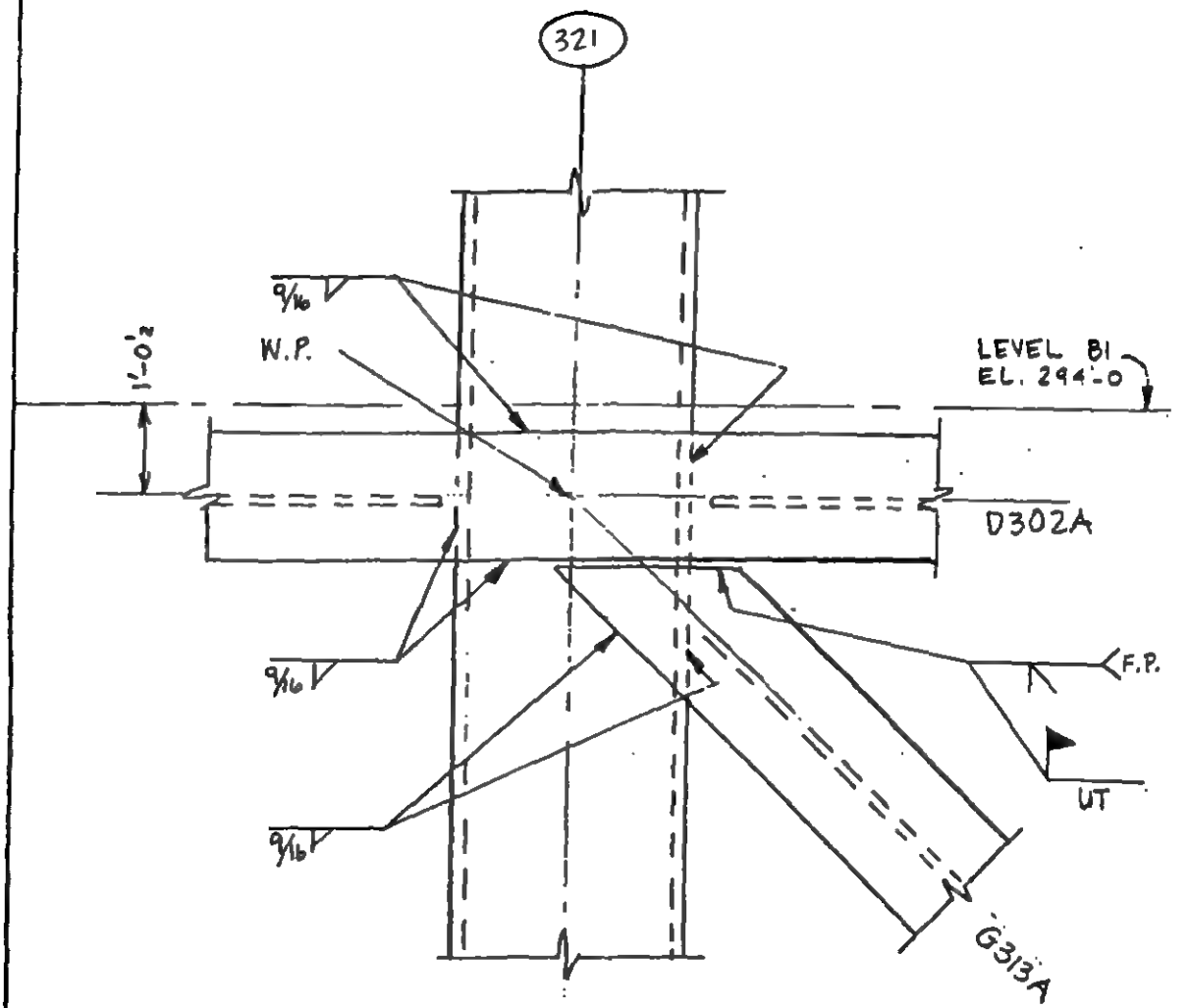

CONFIDENTIAL

REV.	LERA LESLIE E. ROBERTSON ASSOCIATES CONSULTING STRUCTURAL ENGINEERS	P 1003118	DRAWING NO.
	WTC - STRUCTURAL INTEGRITY INVESTIGATION	DRAFT KEH	IN-T1SW 4.3-2
	ULTRASONIC TESTING CONNECTIONS	DESIGN	
		CHECK	15 JUNE 93

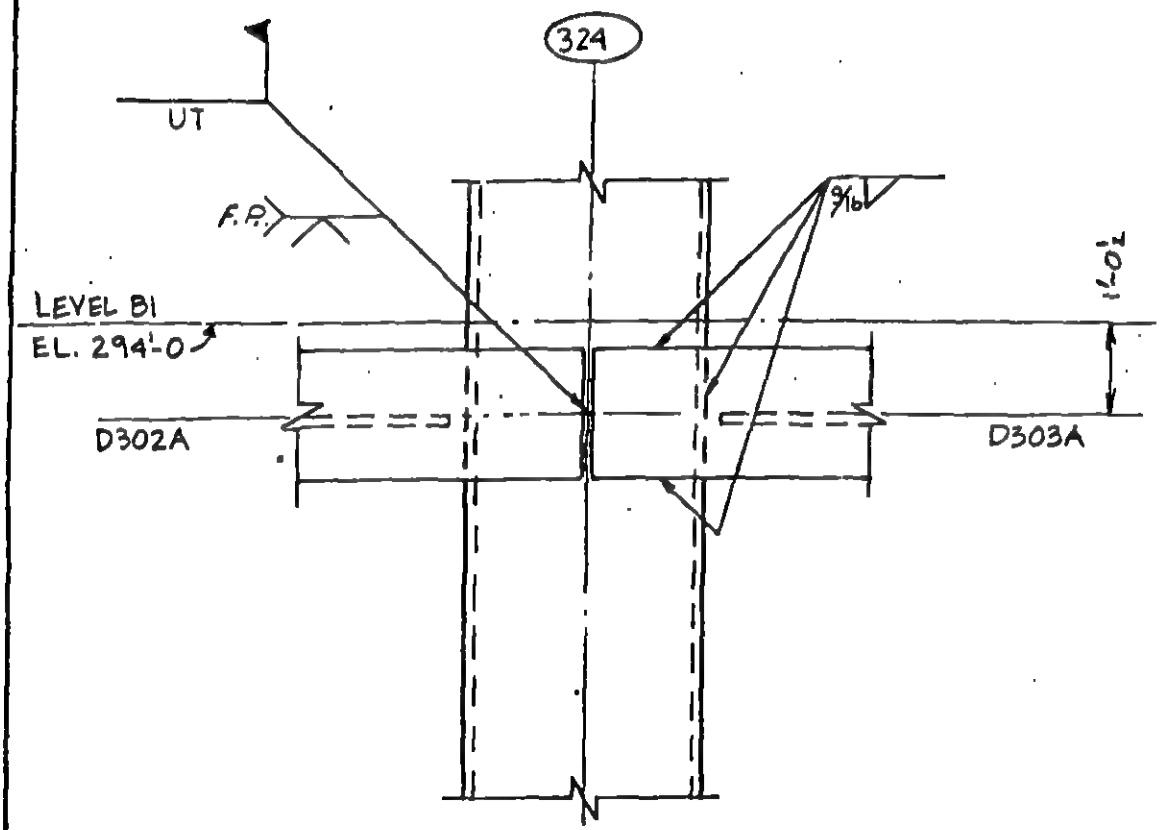

CONFIDENTIAL

EXP 003677

REV.	LERA LESLIE E. ROBERTSON ASSOCIATES CONSULTING STRUCTURAL ENGINEERS	P 1003118	DRAWING NO.
	WTC - STRUCTURAL INTEGRITY INVESTIGATION	DRAFT KEH	IN-T1SW 4.3-3
	ULTRASONIC TESTING CONNECTIONS	DESIGN	
		CHECK	15 JUNE 93

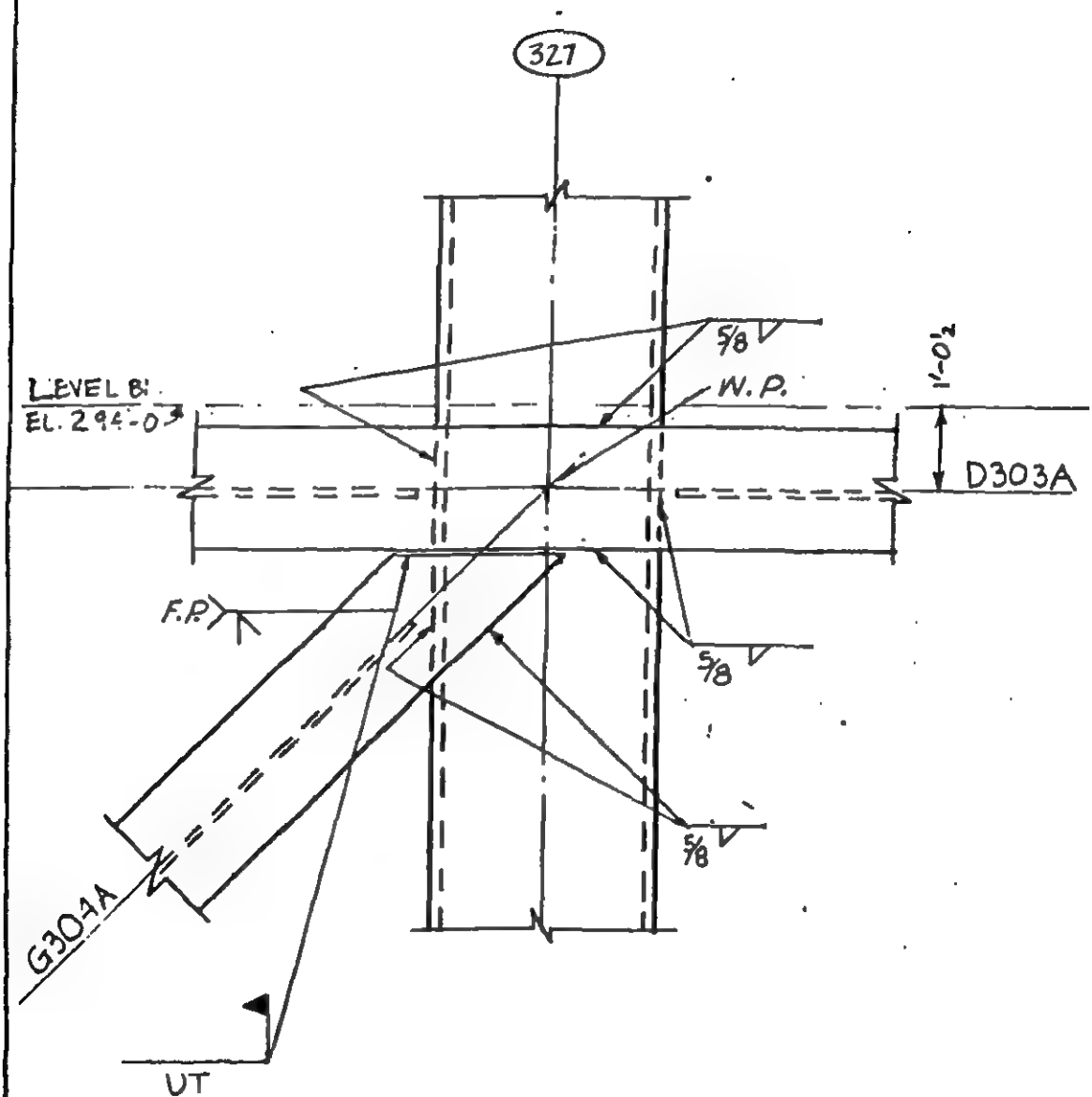

REV.	LERA LESLIE E. ROBERTSON ASSOCIATES CONSULTING STRUCTURAL ENGINEERS	P 100311B	DRAWING NO.
	WTC - STRUCTURAL INTEGRITY INVESTIGATION	DRAFT KEH	IN-T1SW
	ULTRASONIC TESTING CONNECTIONS	DESIGN	4.3-4
		CHECK	15 JUNE 93

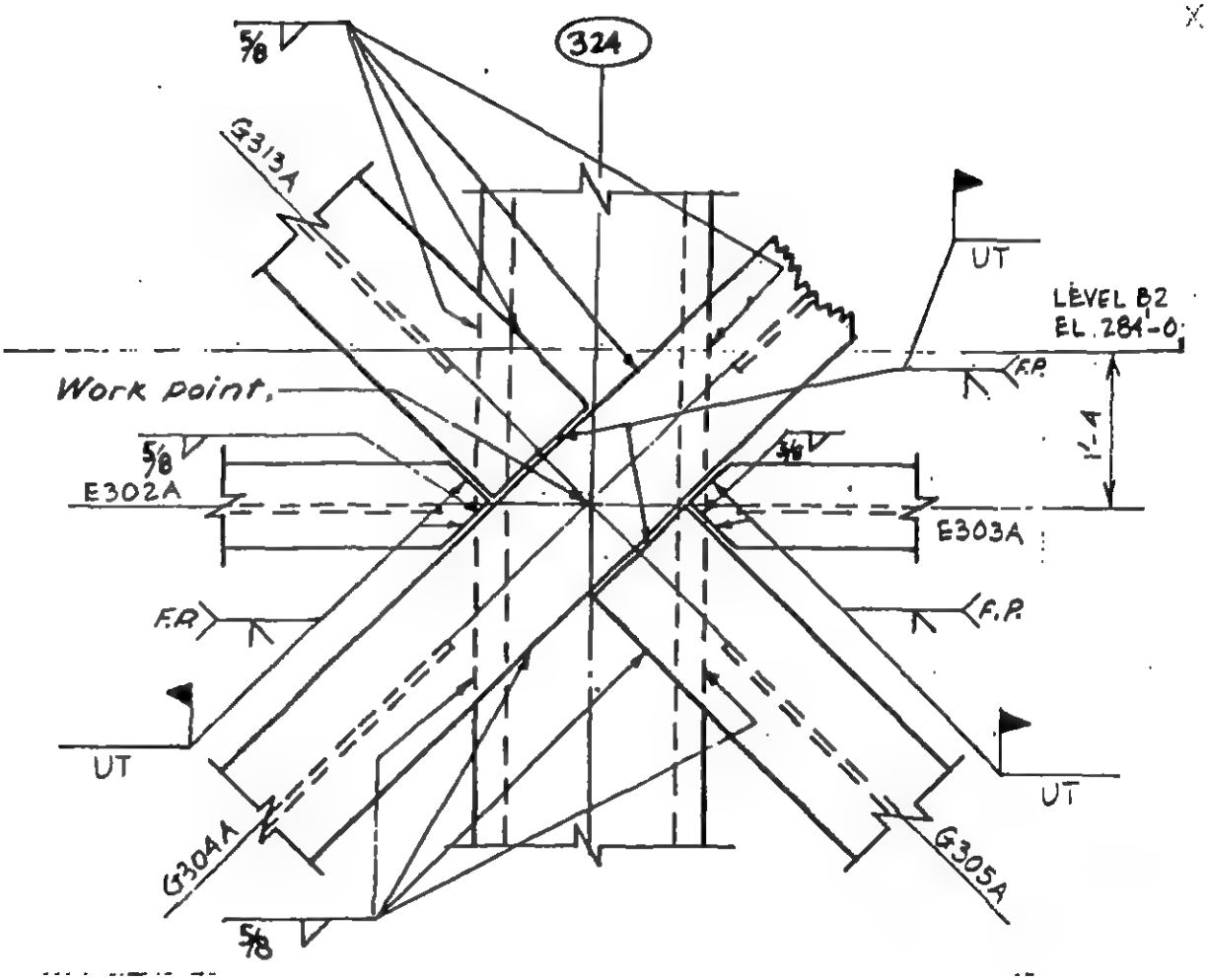

REV.	LERA LESLIE E. ROBERTSON ASSOCIATES CONSULTING STRUCTURAL ENGINEERS	P 1003118	DRAWING NO. IN-T1SW 4.3-5
	WTC - STRUCTURAL INTEGRITY INVESTIGATION	DRAFT KEH	
	ULTRASONIC TESTING CONNECTIONS	DESIGN	
		CHECK	15 JUNE 93

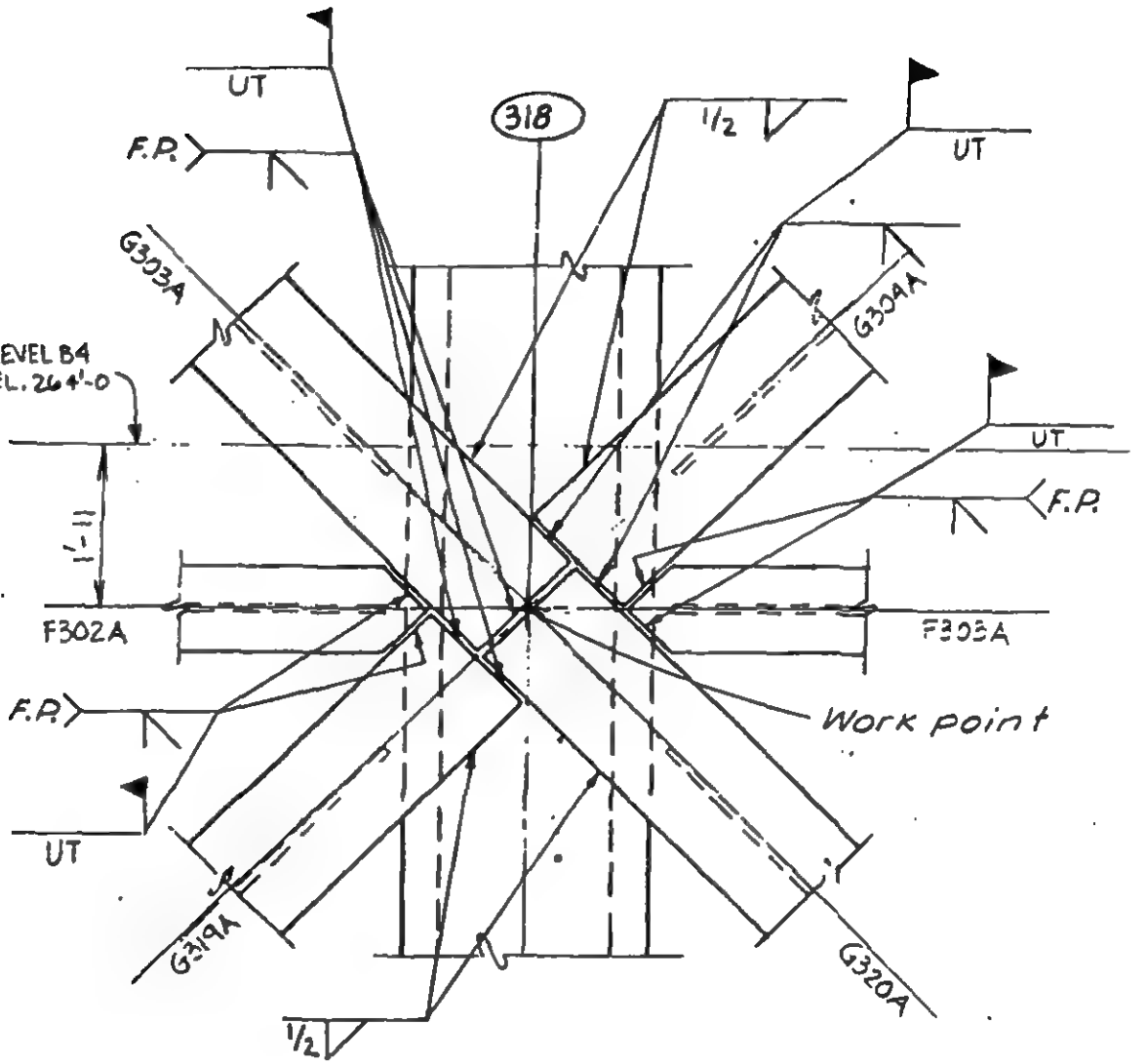

CONFIDENTIAL

EXP 003680

REV.	LERA LESLIE E. ROBERTSON ASSOCIATES CONSULTING STRUCTURAL ENGINEERS	P 1003118	DRAWING NO.
	WTC - STRUCTURAL INTEGRITY INVESTIGATION	DRAFT KEH	IN-T1SW 4.3-6
	ULTRASONIC TESTING CONNECTIONS	DESIGN	
		CHECK	15 JUNE 93

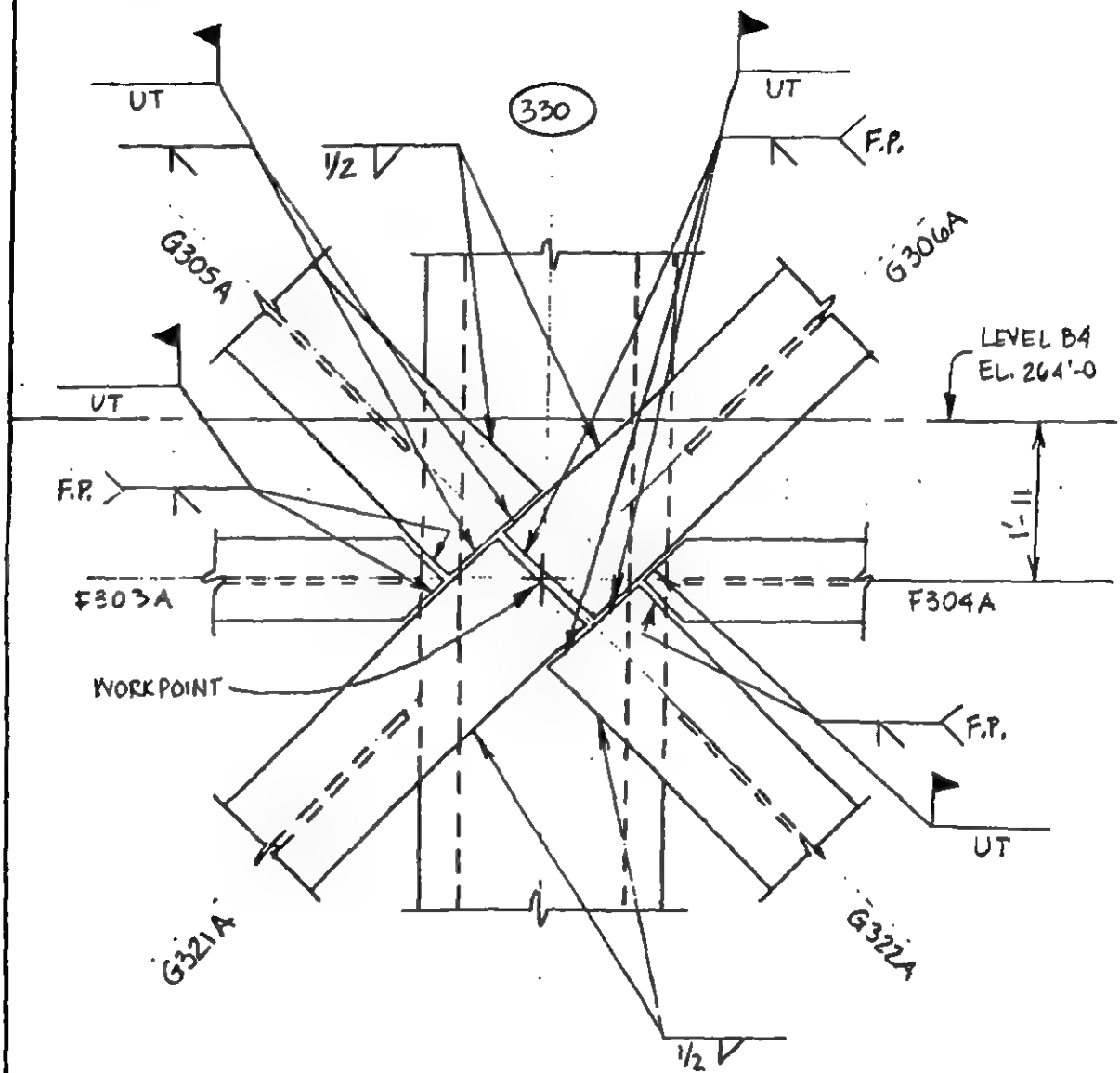

CONFIDENTIAL

EXP 003681

REV.	LERA LESLIE E. ROBERTSON ASSOCIATES CONSULTING STRUCTURAL ENGINEERS	P 1003119	DRAWING NO. IN-T1SW 4.3-7
	WTC - STRUCTURAL INTEGRITY INVESTIGATION	DRAFT KEH	
	ULTRASONIC TESTING	DESIGN	
	CONNECTIONS	CHECK	24 JUN 93

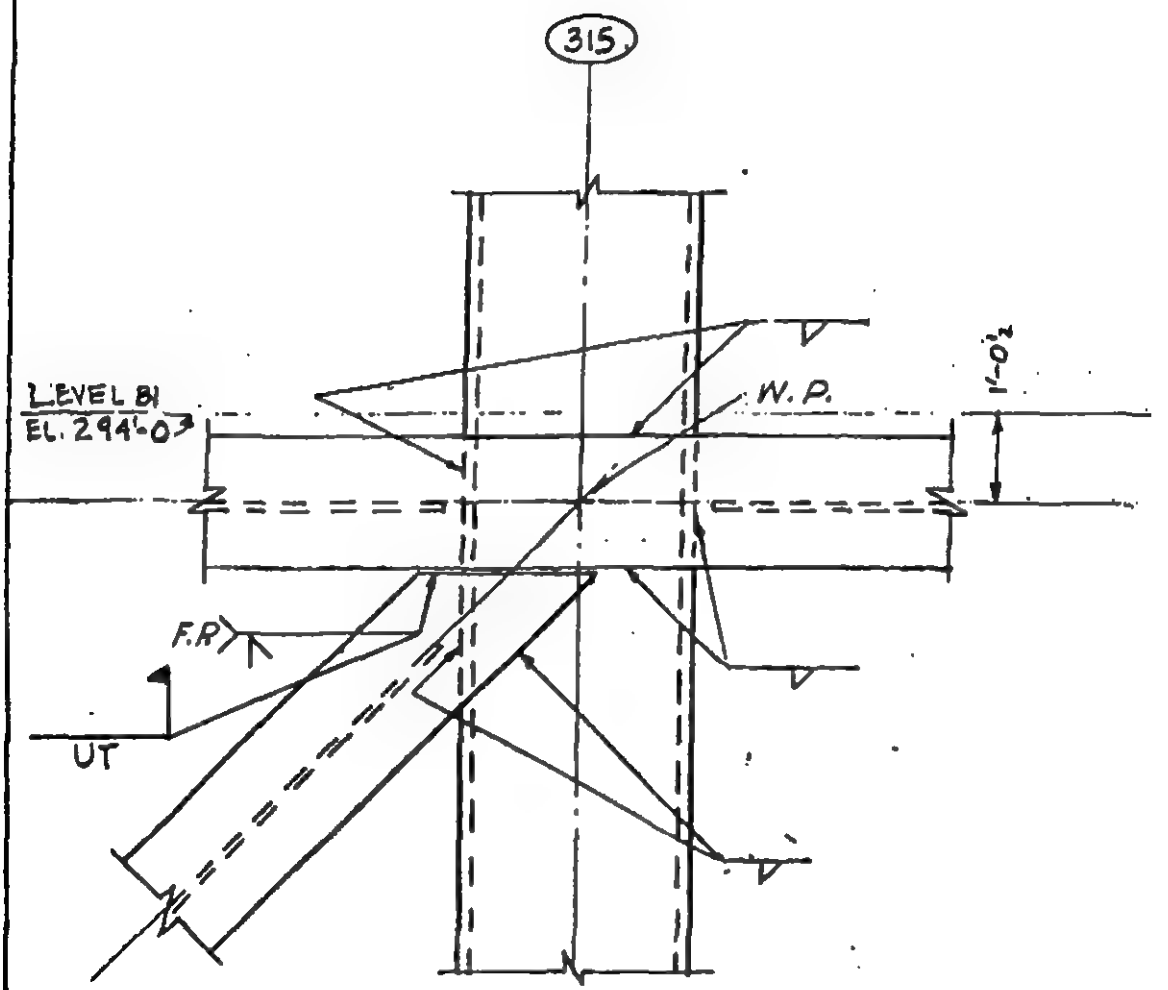

REV.	LERA LESLIE E. ROBERTSON ASSOCIATES CONSULTING STRUCTURAL ENGINEERS	P 1003119	DRAWING NO. IN - T1 SW
	WTC- STRUCTURAL INTEGRITY INVESTIGATION	DRAFT KEH	4.4 - 1
	ULTRASONIC TESTING SPANDRELS	DESIGN	
		CHECK	24 JUN 93

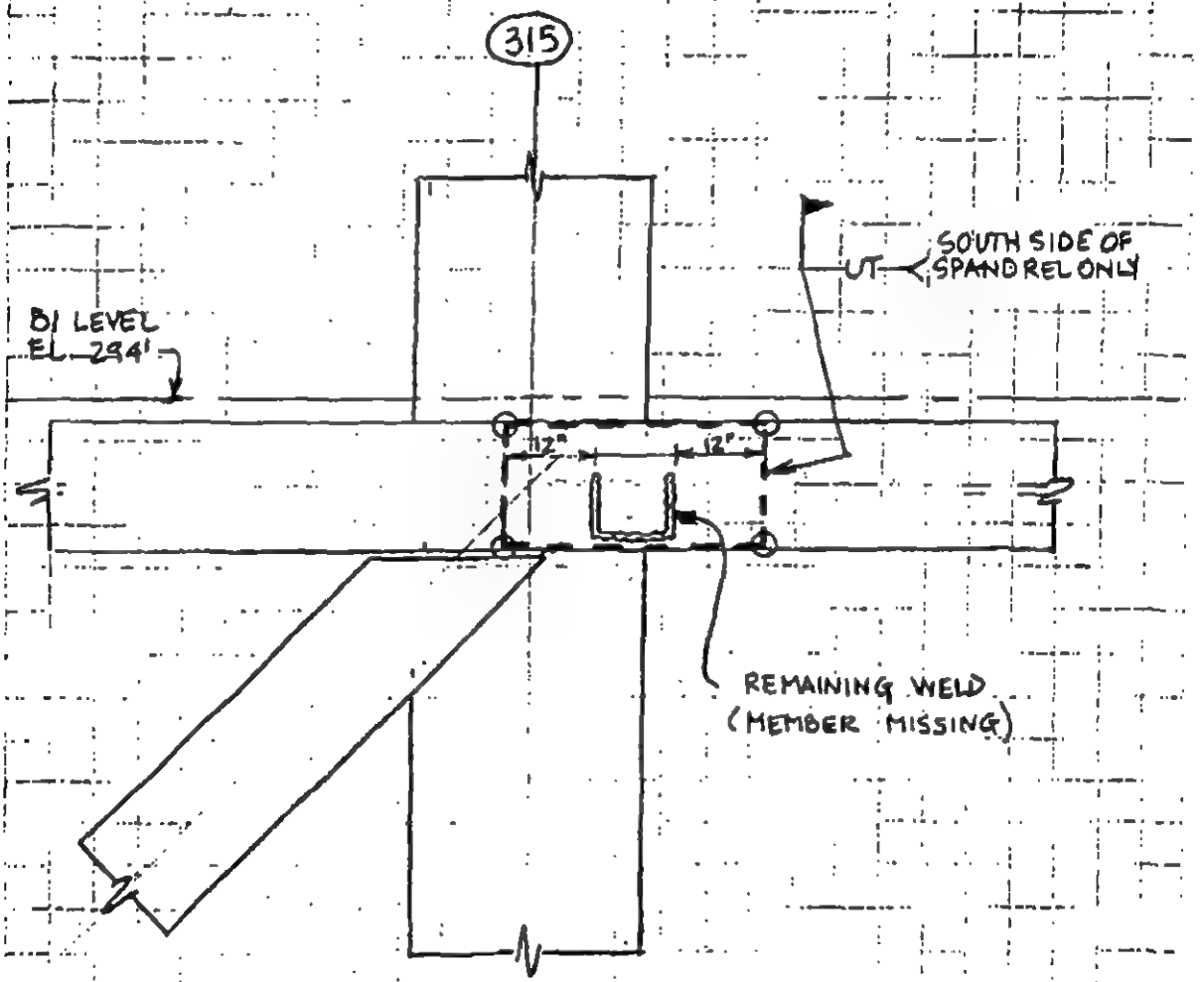

REV.	LERA LESLIE E. ROBERTSON ASSOCIATES CONSULTING STRUCTURAL ENGINEERS	P 100315	DRAWING NO.
	WTC - STRUCTURAL INTEGRITY INVESTIGATION	DRAFT KEH	IN-T1SN 5.2-1
	CORE SPECIMENS COLUMNS	DESIGN	
		CHECK	15 JUNE 93

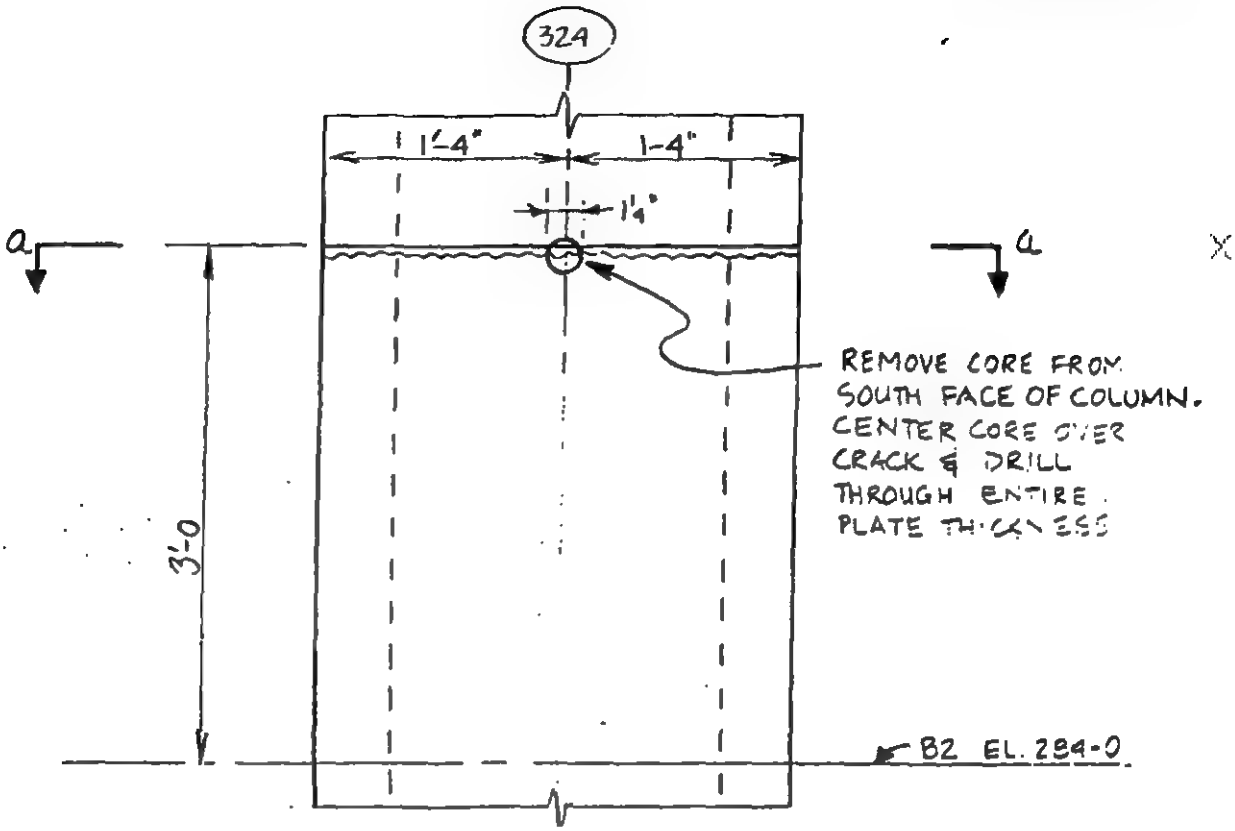

COLUMN - SOUTH ELEVATION

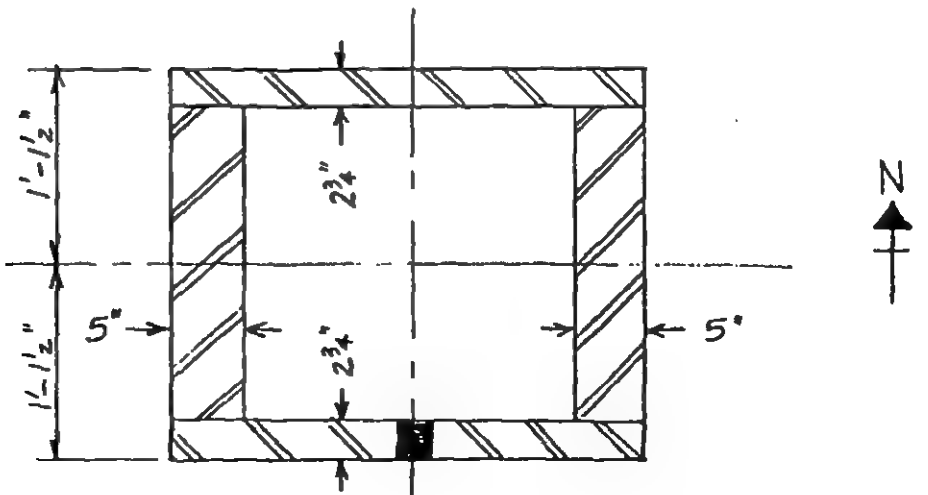

SECTION a-a

CONFIDENTIAL

EXP 003684

REV.	LERA LESLIE E. ROBERTSON ASSOCIATES CONSULTING STRUCTURAL ENGINEERS	P 1003119	DRAWING NO.
	WTC - STRUCTURAL INTEGRITY INVESTIGATION	DRAWN KEH	IN-TISW
	VISUAL INSPECTION	DESIGN	6.2-8.1
	CONNECTION DAMAGE ASSESSMENT	CHECK	21 JUL 93

A

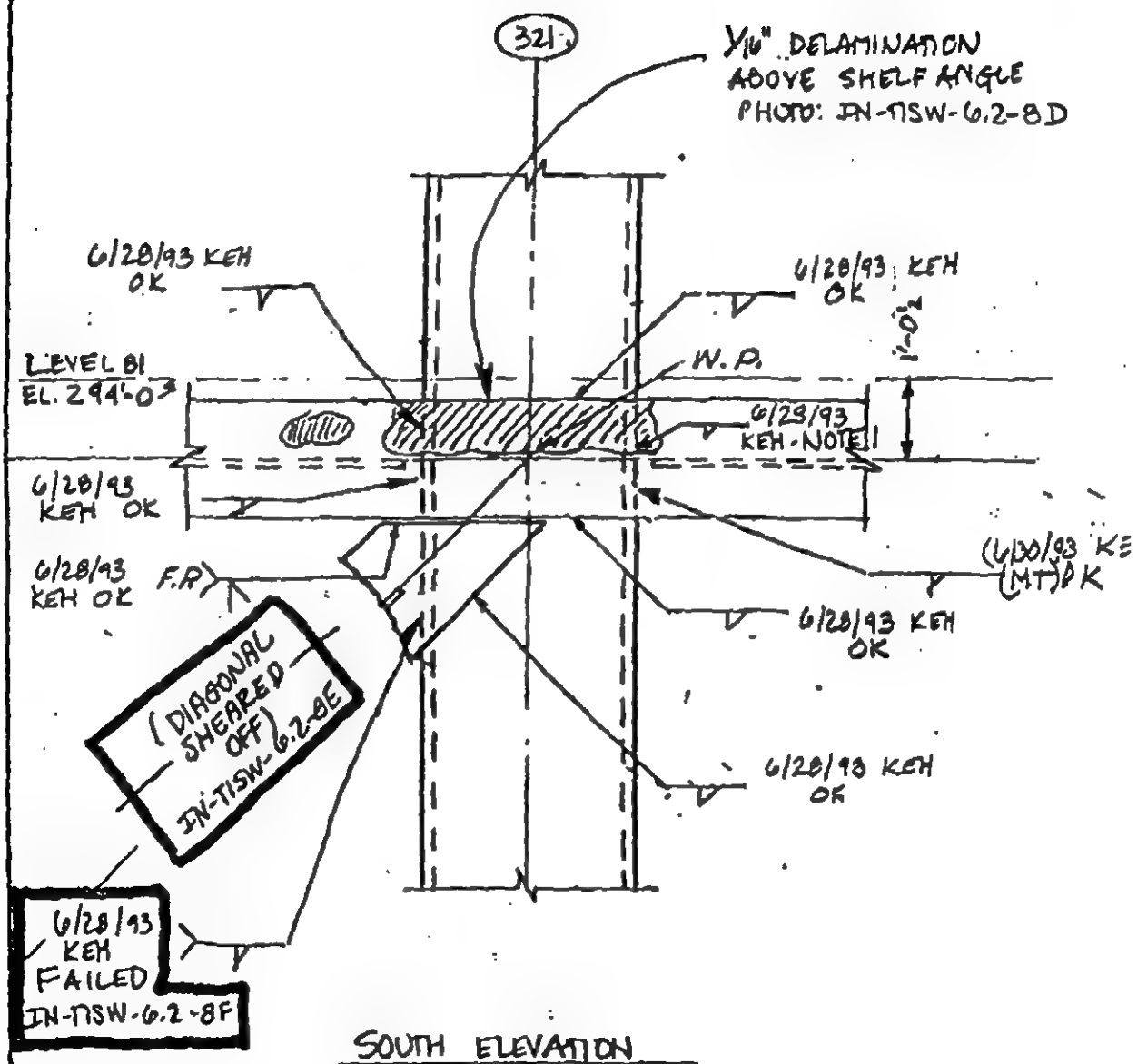

SOUTH ELEVATION

CONFIDENTIAL

REV.	LERA LESLIE E. ROBERTSON ASSOCIATES CONSULTING STRUCTURAL ENGINEERS	P 1003119	DRAWING NO.
	WTC- STRUCTURAL INTEGRITY INVESTIGATION	DRAFT KEH	IN-TISW
	VISUAL INSPECTION	DESIGN KEH	6.2-8.4
	CONNECTION DAMAGE ASSESSMENT	CHECK	21 JUL 93

E

UP

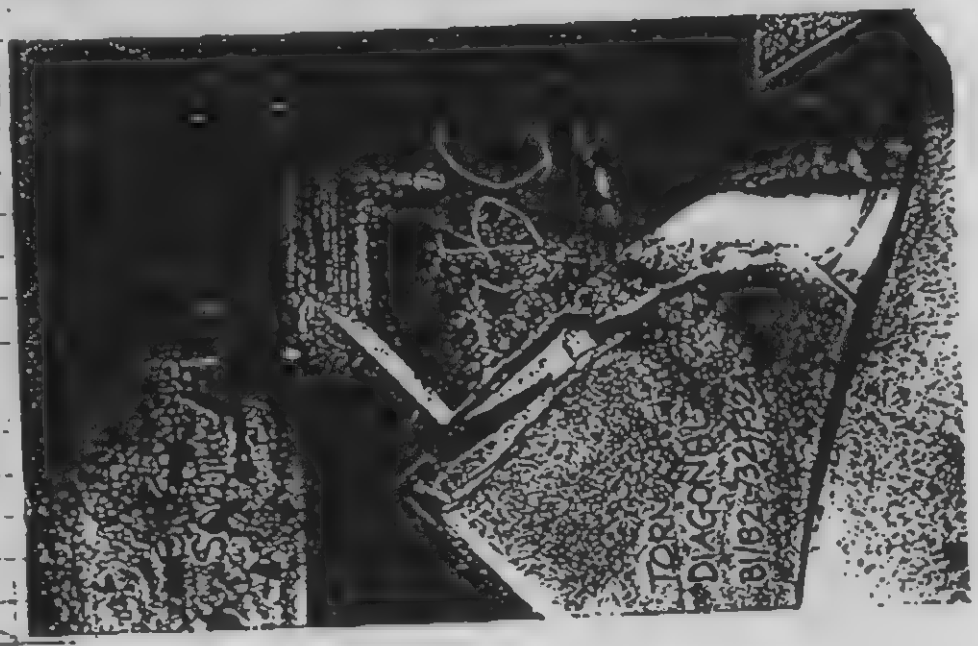

REV.	LERA LESLIE E. ROBERTSON ASSOCIATES CONSULTING STRUCTURAL ENGINEERS	P 1003119	DRAWING NO.
	WTC - STRUCTURAL INTEGRITY INVESTIGATION	DRAFT KEH	JN-11SW
	VISUAL INSPECTION	DESIGN KEH	6.2-8.S
	CONNECTION DAMAGE ASSESSMENT	CHECK	21 JUL 93

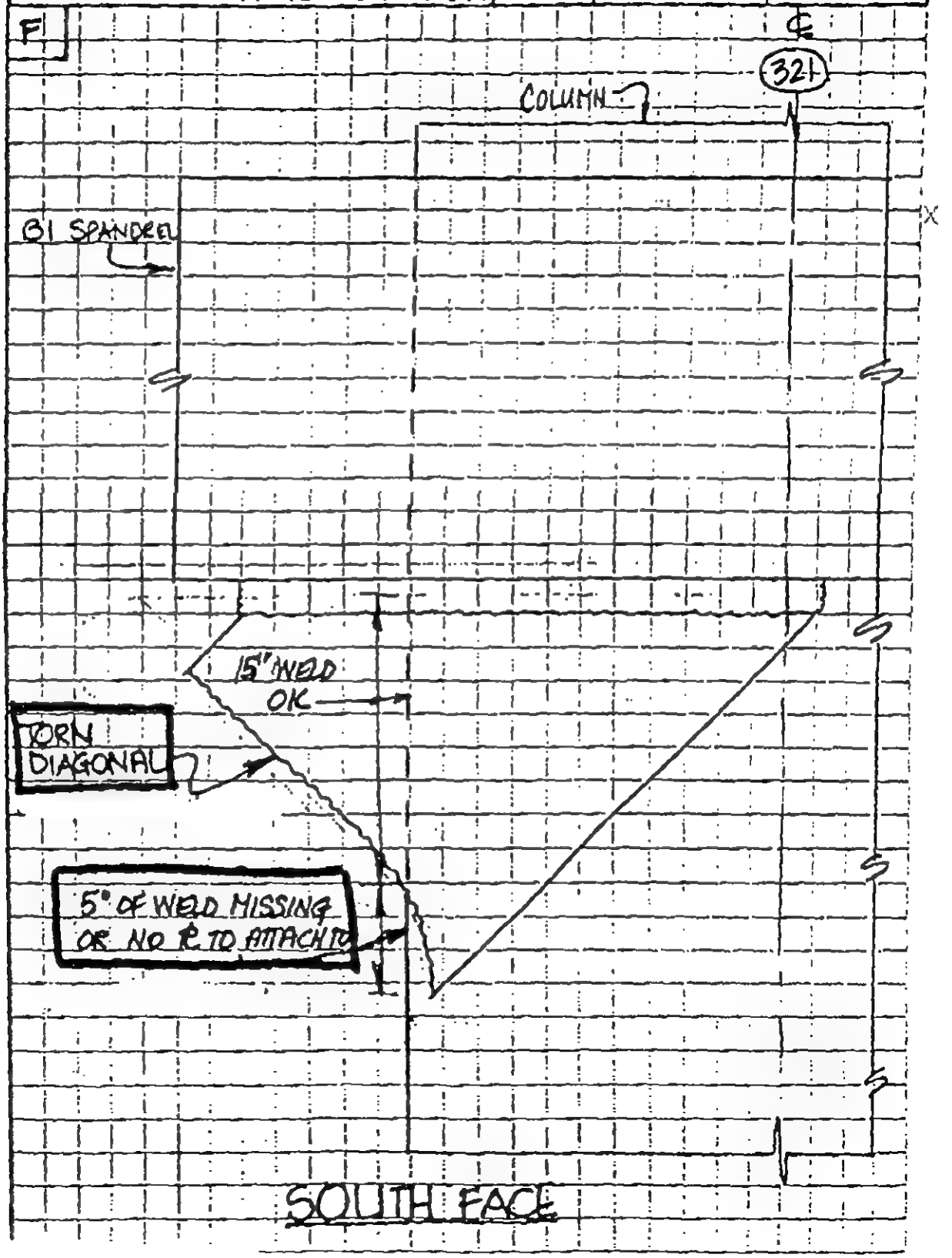

CONFIDENTIAL

REV.	LERA LESLIE E. ROBERTSON ASSOCIATES CONSULTING STRUCTURAL ENGINEERS	P 1003119	DRAWING NO.
	WTC - STRUCTURAL INTEGRITY INVESTIGATION	DRAFT KEH	IN-TISW
	VISUAL INSPECTION	DESIGN KEH	6.2-9.1
	CONNECTION DAMAGE ASSESSMENT	CHECK	21 JUL 93

A

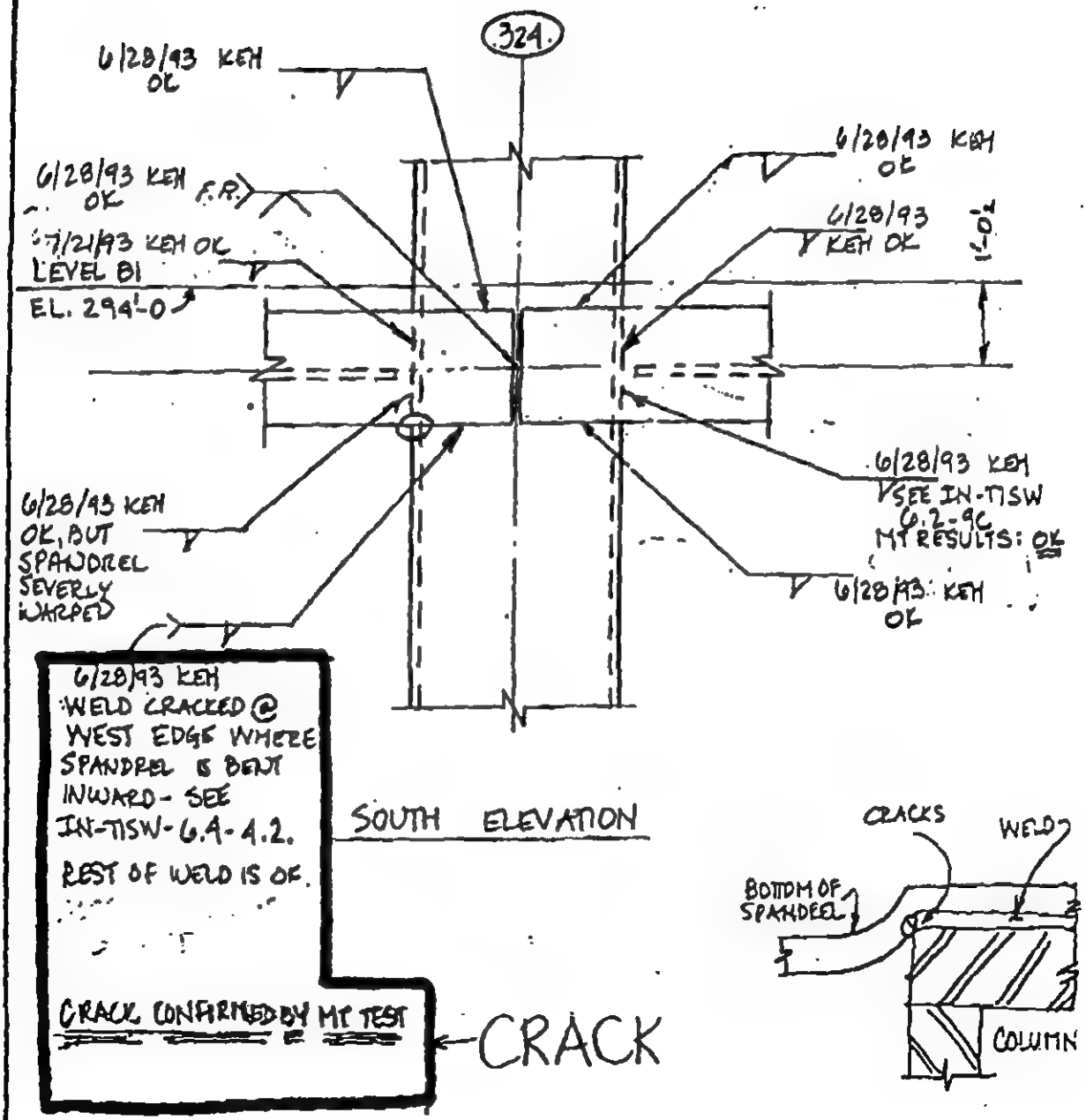

SOUTH ELEVATION

REV.	LERA LESLIE E. ROBERTSON ASSOCIATES CONSULTING STRUCTURAL ENGINEERS	P 1003119	DRAWING NO.
	WTC- STRUCTURAL INTEGRITY INVESTIGATION	DRAFT KEH	IN-TISW
	VISUAL INSPECTION	DESIGN KEH	6.2-10.1
	CONNECTION DAMAGE ASSESSMENT	CHECK	21 JUL 93

A

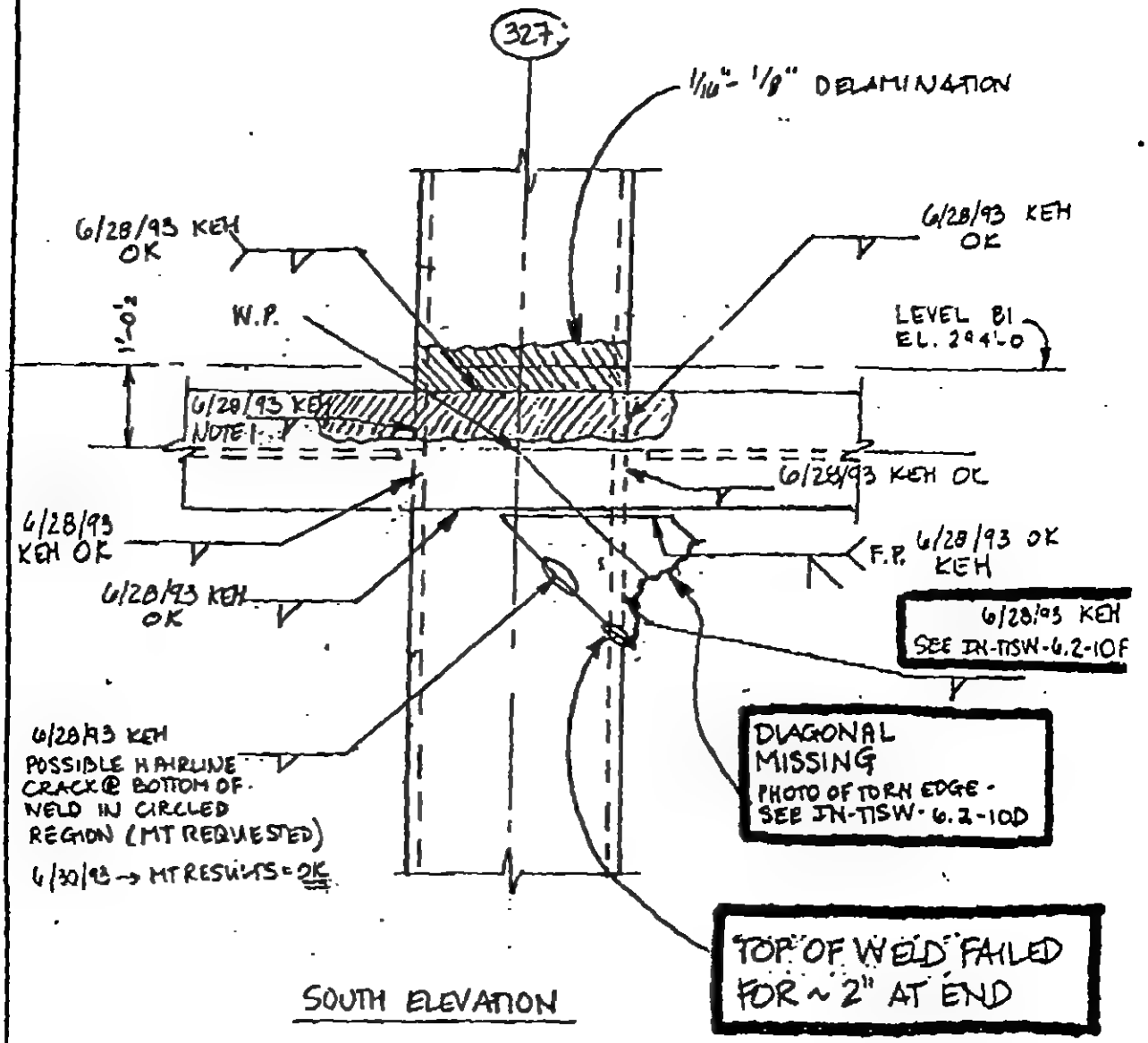

SOUTH ELEVATION

REV.	LERA LESLIE E. ROBERTSON ASSOCIATES CONSULTING STRUCTURAL ENGINEERS	P 1003119	DRAWING NO.
	WTC-STRUCTURAL INTEGRITY INVESTIGATION	DRAFT KEH	IN-TISW
	VISUAL INSPECTION	DESIGN KEH	6.2-10.2
	CONNECTION-DAMAGE ASSESSMENT	CHECK	21 JUL 93

B

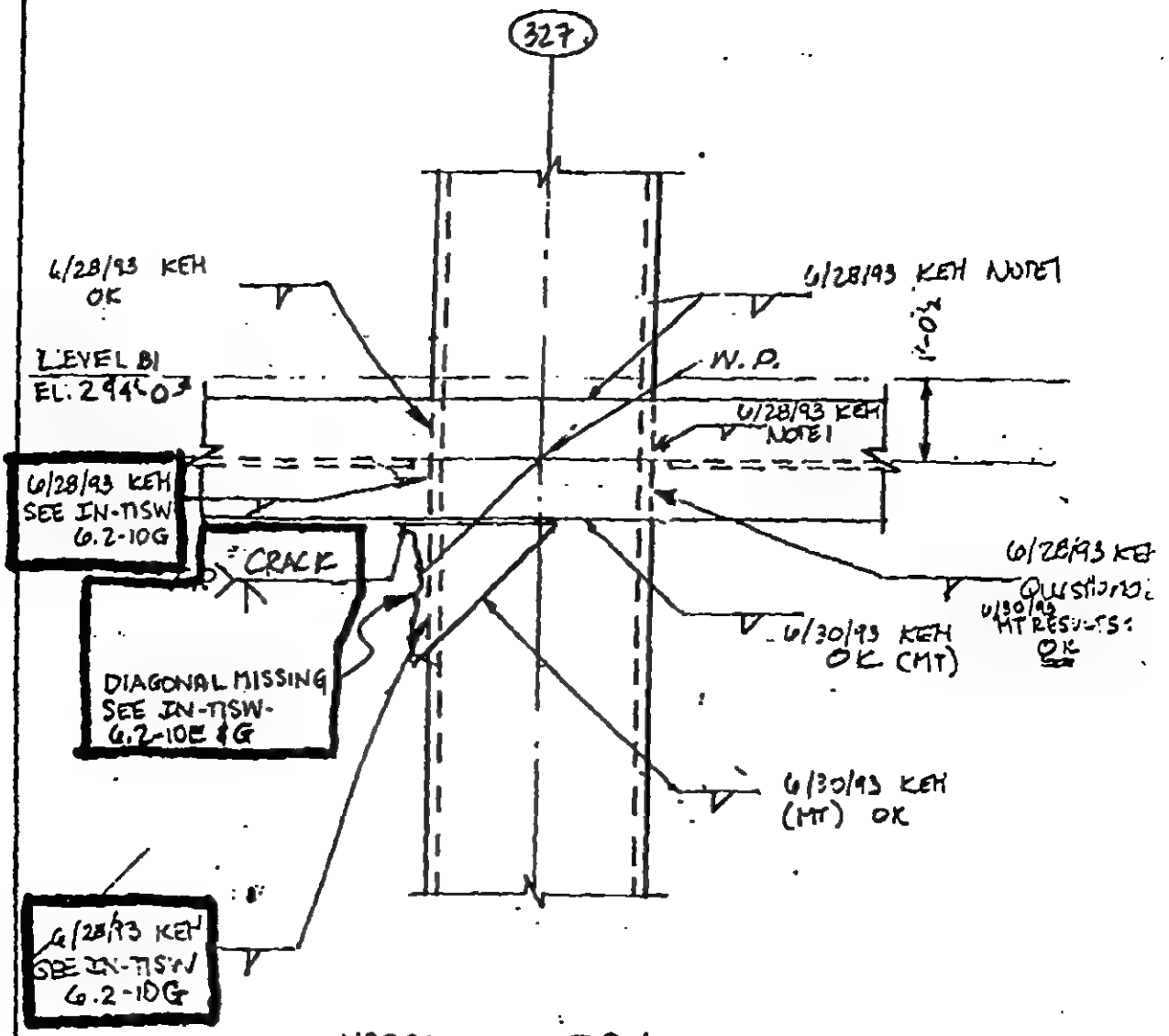

NORTH ELEVATION

ONFIDENTIAL

REV.	LERA LESLIE E. ROBERTSON ASSOCIATES CONSULTING STRUCTURAL ENGINEERS	P 1003119	DRAWING NO.
	WTC-STRUCTURAL INTEGRITY INVESTIG.	DRAFT KEH	IN-TISW
	VISUAL INSPECTION	DESIGN KEH	6.2-10.4
	CONNECTION DAMAGE ASSESSMENT	CHECK	21 JUL 93

D

UP

REV.	LERA LESLIE E. ROBERTSON ASSOCIATES CONSULTING STRUCTURAL ENGINEERS	P 1003119	DRAWING NO.
	WTC-STRUCTURAL INTEGRITY INVESTIGATION	DRAFT KEH	IN-TISW
	VISUAL INSPECTION [redacted]	DESIGN KEH	6.2-10.5
	CONNECTION DAMAGE ASSESSMENT	CHECK	21 JUL 93

VIEWED FROM SOUTH

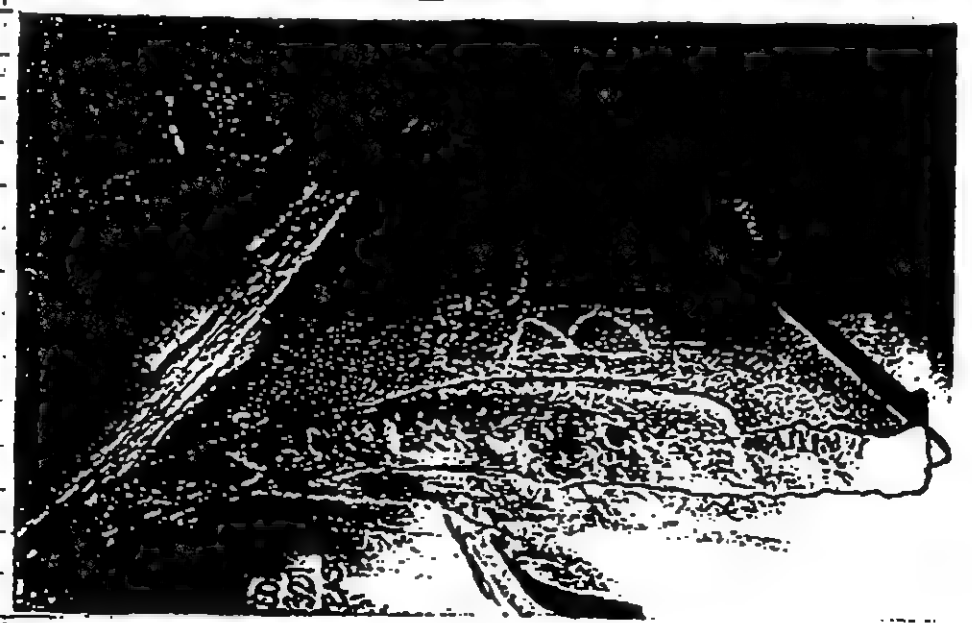

VIEWED FROM NORTH

REV.	LERA LESLIE E. ROBERTSON ASSOCIATES CONSULTING STRUCTURAL ENGINEERS	P 1003119	DRAWING NO.
	WTC - STRUCTURAL INTEGRITY INVESTIGATION	DRAFT KEH	JN-TISW
	VISUAL INSPECTION	DESIGN KEH	6.2-10.6
	CONNECTION DAMAGE ASSESSMENT	CHECK	21 JUL 93

F

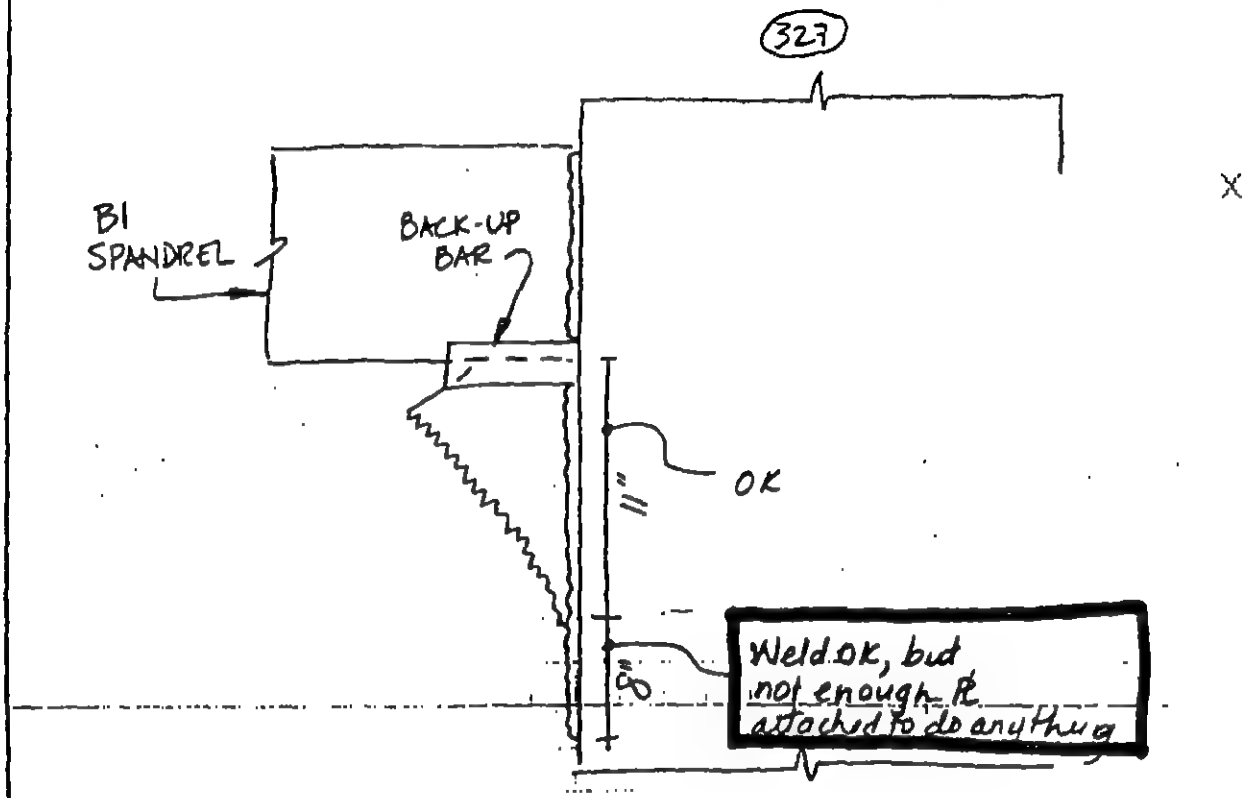

NORTH SIDE of SOUTH DIAGONAL

CONFIDENTIAL

REV.	LERA LESLIE E. ROBERTSON ASSOCIATES CONSULTING STRUCTURAL ENGINEERS	P 1003119	DRAWING NO.
	WTC-STRUCTURAL INTEGRITY INVESTIGATION	DRAFT KEH	IN-TISW
	VISUAL INSPECTION	DESIGN KEH	6.2-10.7
	CONNECTION DAMAGE ASSESSMENT	CHECK	21 JUL 93

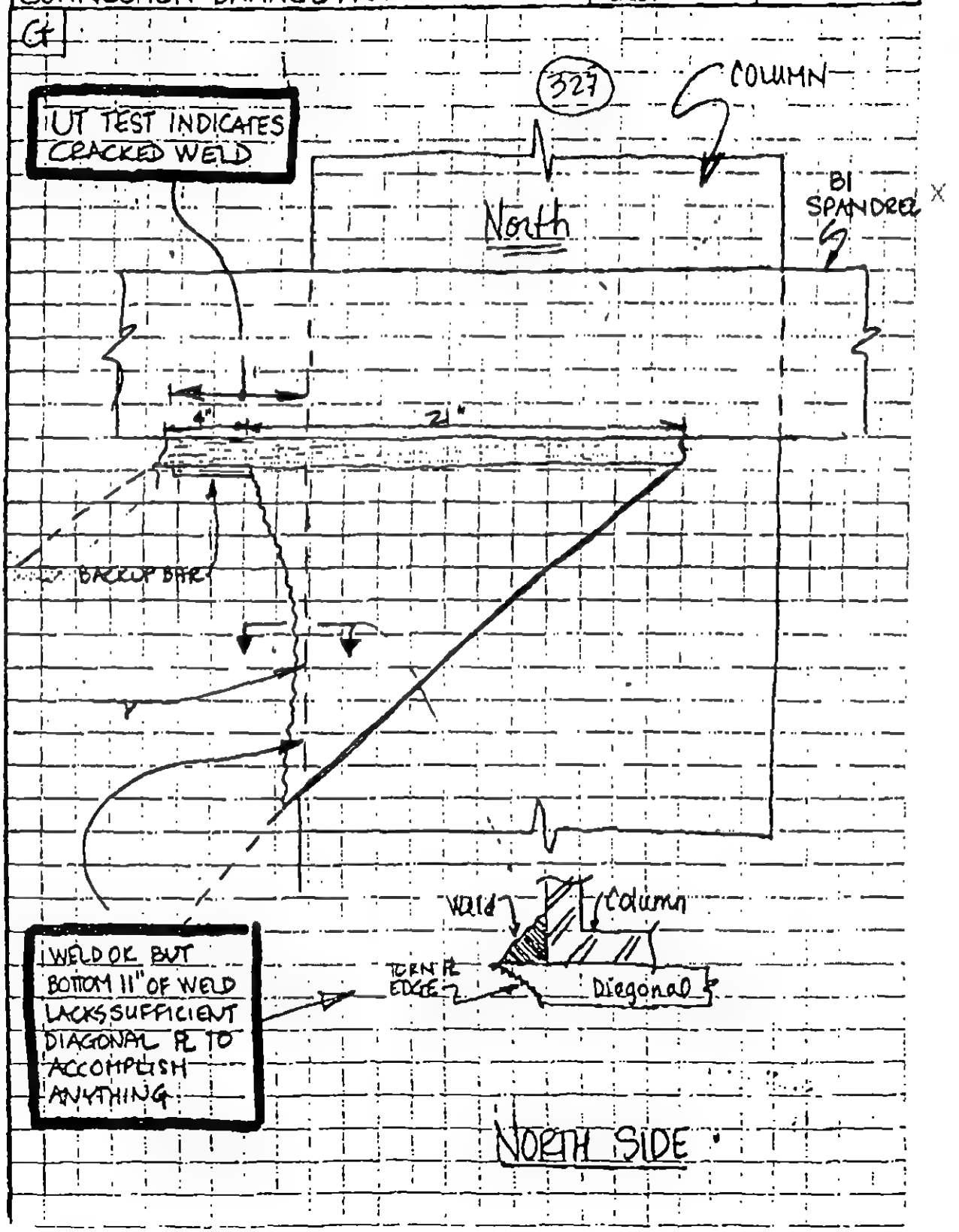

VISUAL INSPECTION
CONNECTION - DAMAGE ASSESSMENT

DESIGN KEH	6.2-25.1
CHECK	21 JUL 93

A

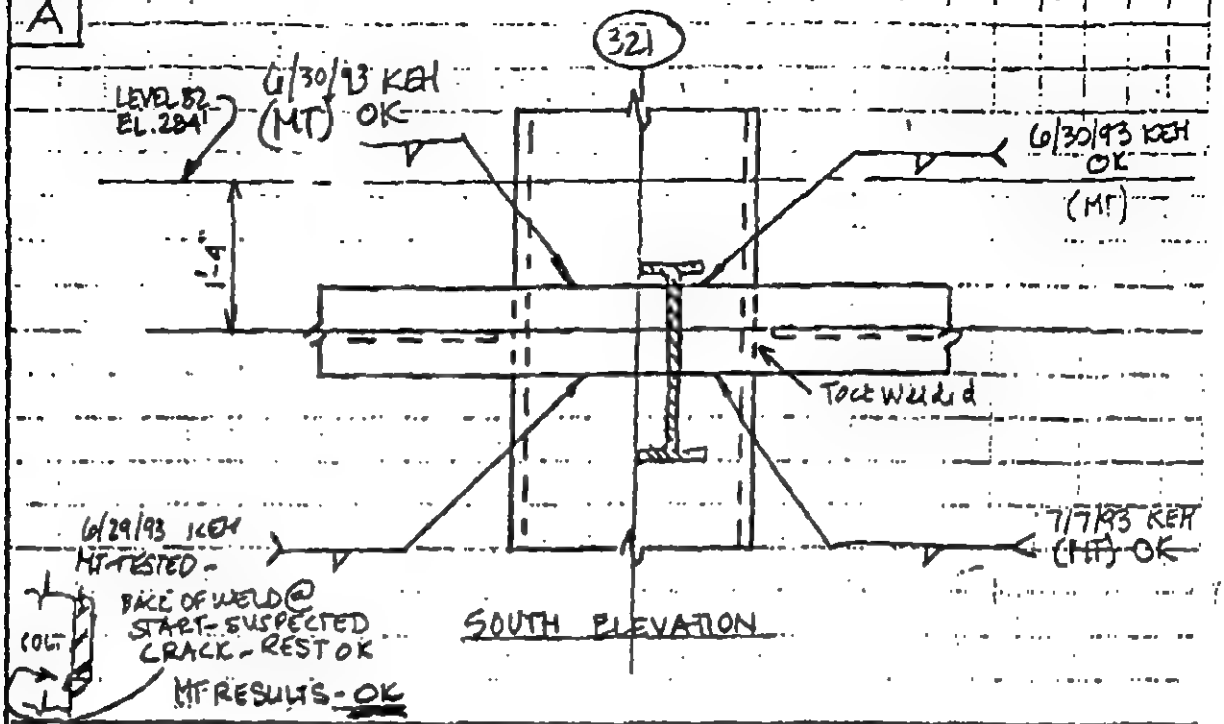

B

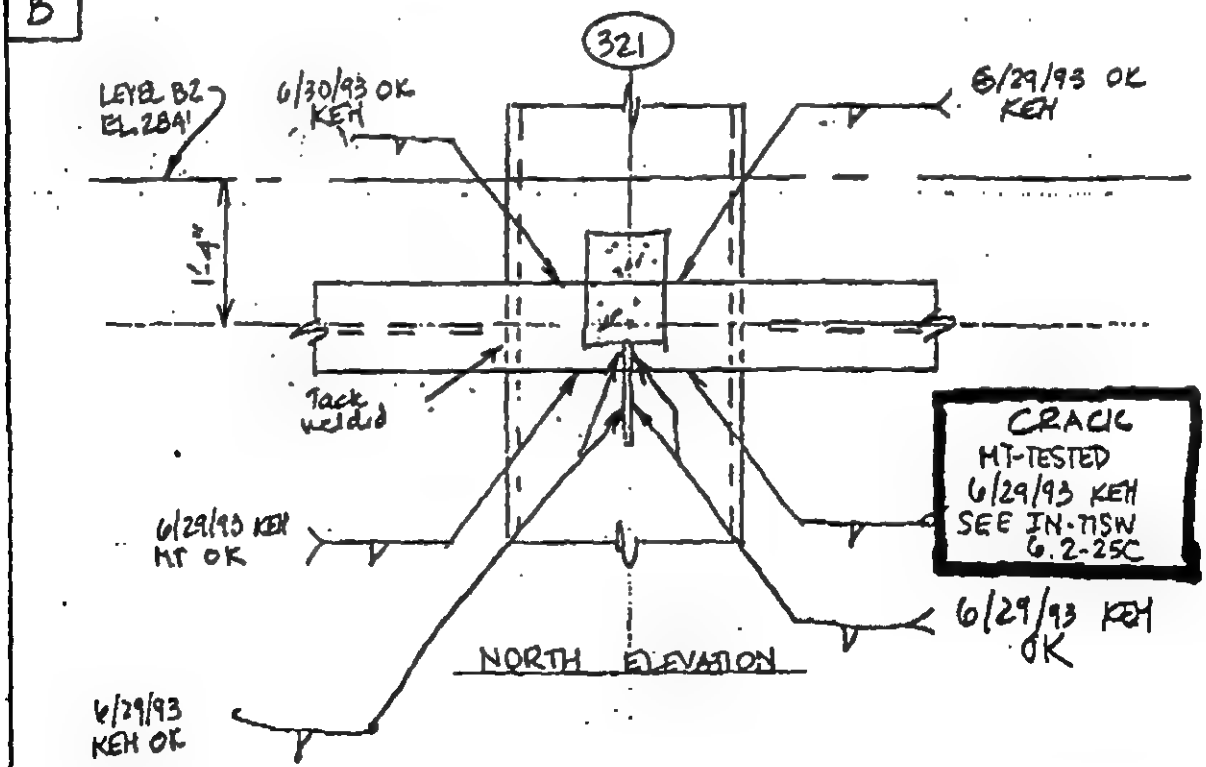

CONFIDENTIAL

EXP 003695

REV.	LERA LESLIE E. ROBERTSON ASSOCIATES CONSULTING STRUCTURAL ENGINEERS	P 1003119	DRAWING NO.
	WTC-STRUCTURAL INTEGRITY INVESTIGATION	DRAFT KEH	IN-TISW
	VISUAL INSPECTION	DESIGN KEH	6.2-25.2
	CONNECTION DAMAGE ASSESSMENT	CHECK	21 JUL 93

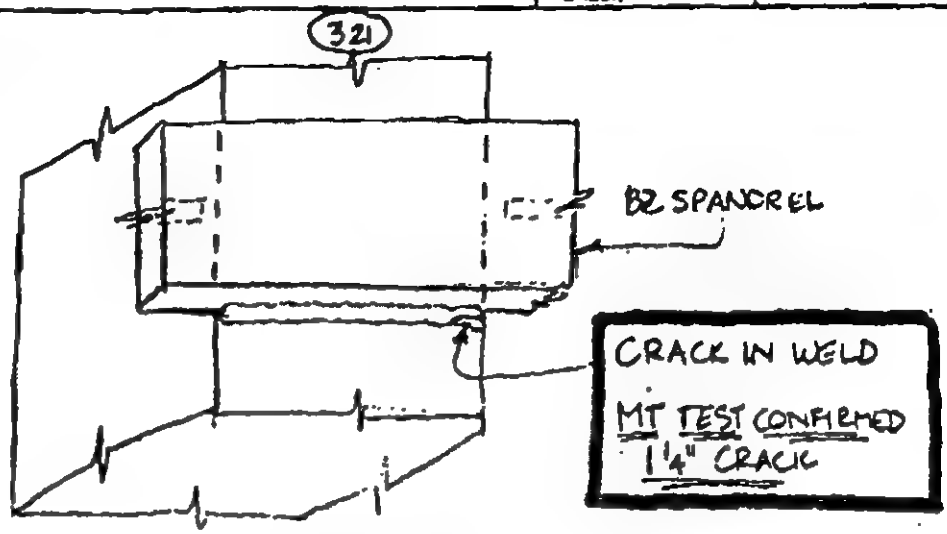

NORTH ELEVATION

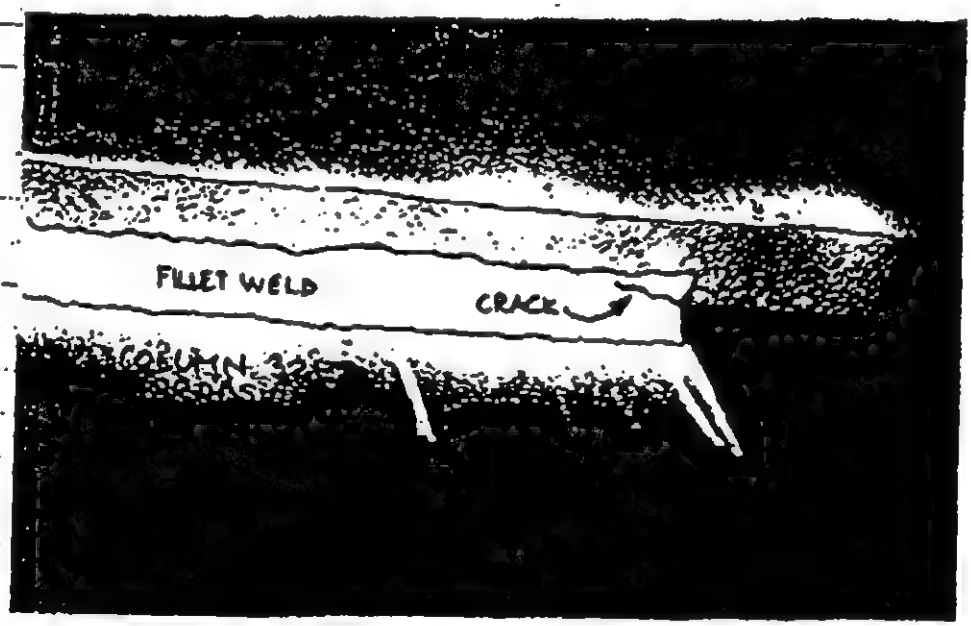

REV.	LERA LESLIE E. ROBERTSON ASSOCIATES CONSULTING STRUCTURAL ENGINEERS	P 1003119	DRAWING NO.
	WTC - STRUCTURAL INTEGRITY INVESTIGATION	DRAFT KEH	IN-TISW
	VISUAL INSPECTION	DESIGN KEH	6.2.25.4
	CONNECTION DAMAGE ASSESSMENT	CHECK	23 JUL 93

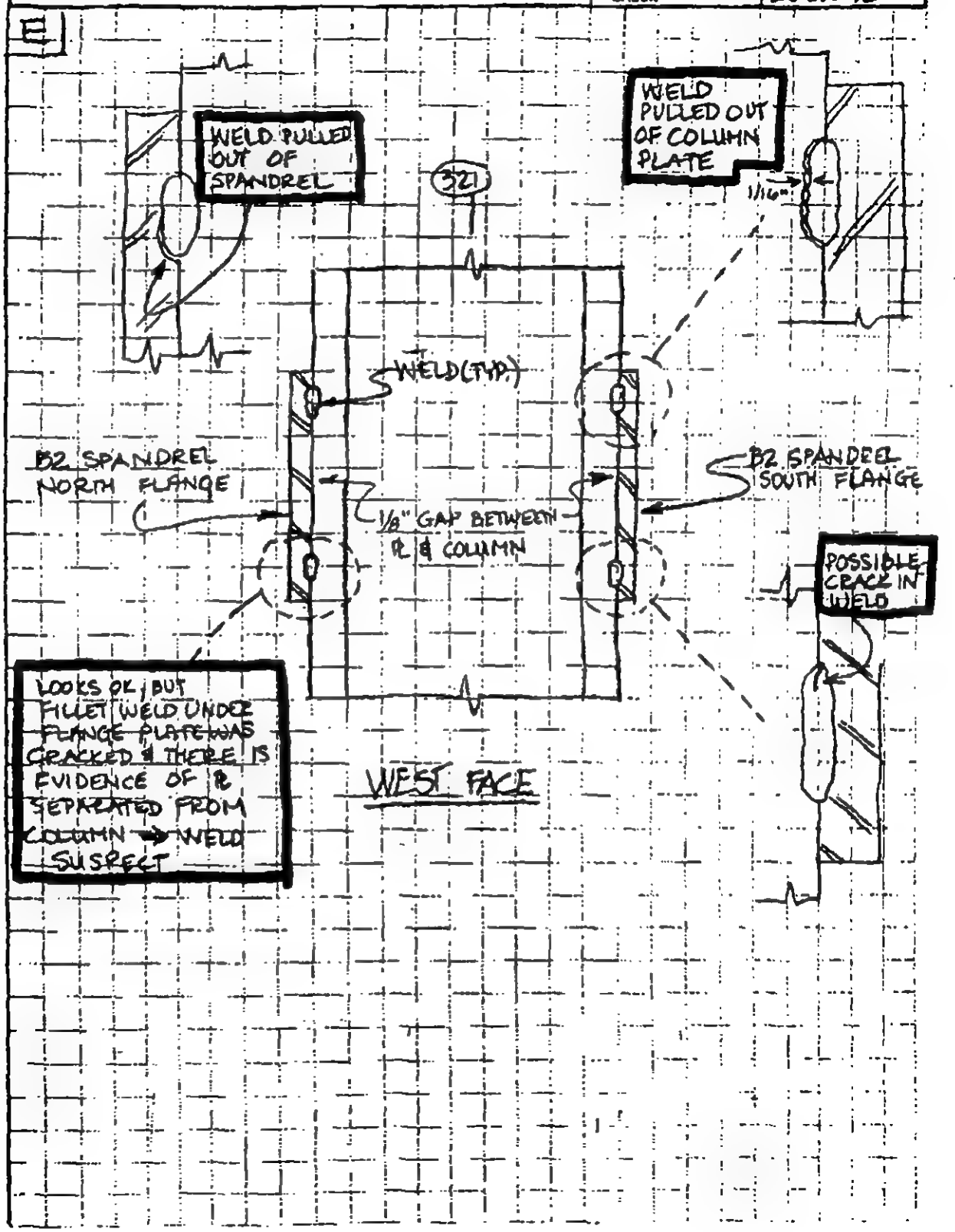

REV.	LERA LESLIE E. ROBERTSON ASSOCIATES CONSULTING STRUCTURAL ENGINEERS	P 1003119	DRAWING NO.
	WTC - STRUCTURAL INTEGRITY INVESTIGATION	DRAFT KEH	IN-TISW
	VISUAL INSPECTION	DESIGN	6.2-26.1
	CONNECTIONS - DAMAGE ASSESSMENT	CHECK	21 JUL 93

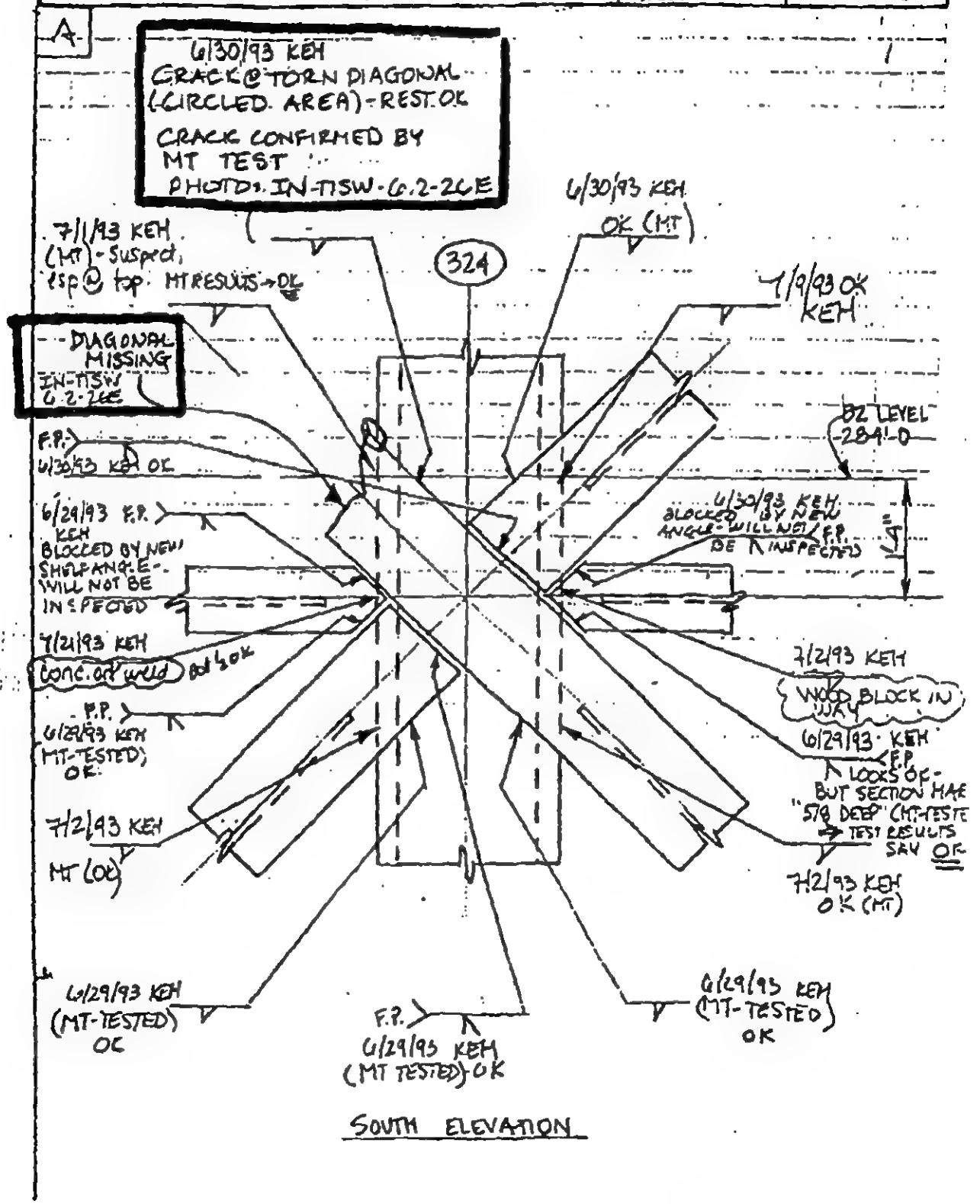

SOUTH ELEVATION

REV.	LERA LESLIE E. ROBERTSON ASSOCIATES CONSULTING STRUCTURAL ENGINEERS	P 1003119	DRAWING NO.
	WTC - STRUCTURAL INTEGRITY INVESTIGATION	DRAFT KEH	IN - TISW
	VISUAL INSPECTION	DESIGN	6.2-26.2
	CONNECTION DAMAGE ASSESSMENT	CHECK	21 JUL 93

B

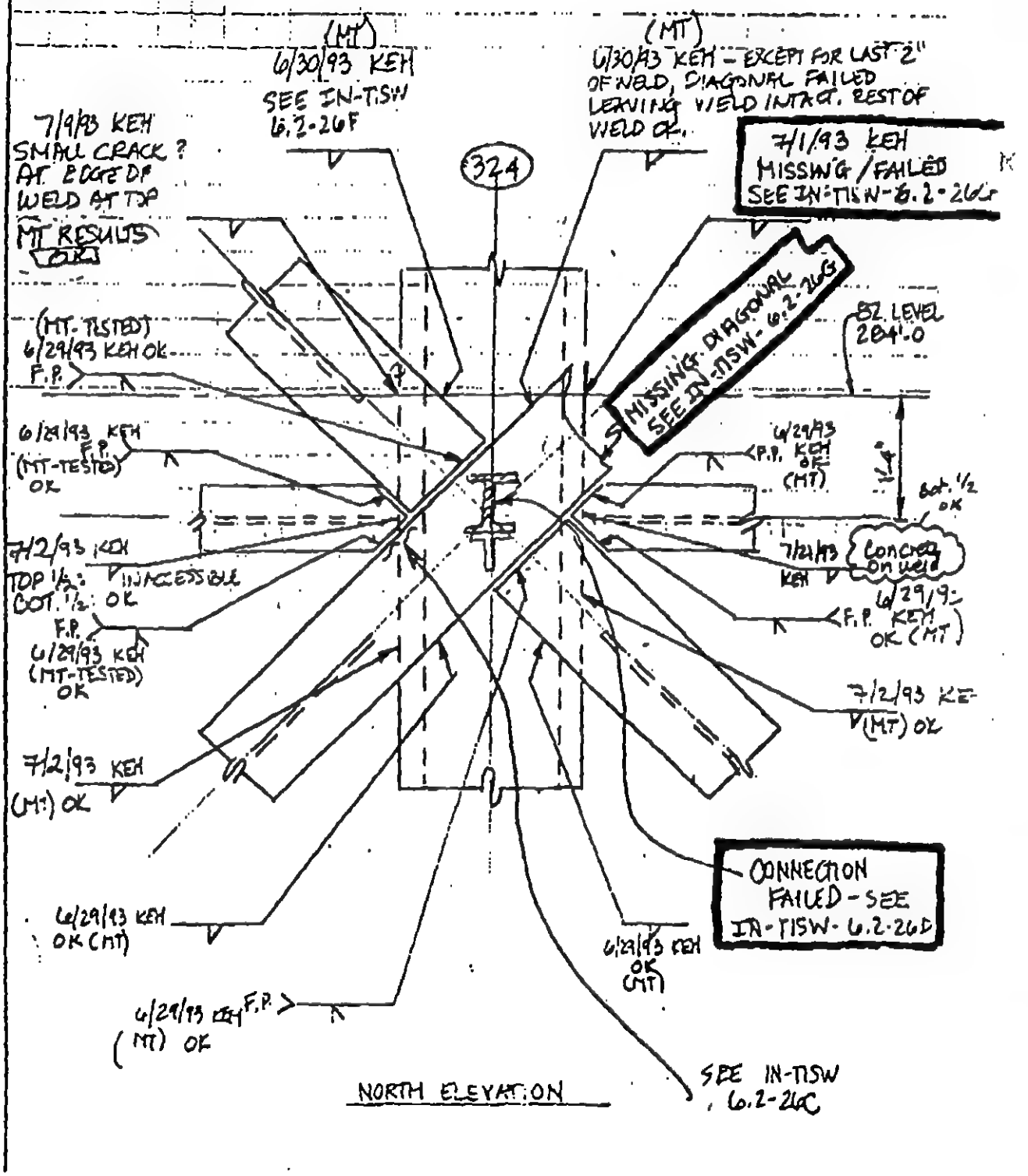

REV.	LERA LESLIE E. ROBERTSON ASSOCIATES CONSULTING STRUCTURAL ENGINEERS	P 1003119	DRAWING NO.
	WTC - STRUCTURAL INTEGRITY INVESTIGATION	DRAFT KEH	IN-TISW
	VISUAL INSPECTION	DESIGN KEH	6.2-26.4
	CONNECTION DAMAGE ASSESSMENT	CHECK	21 JUL 93

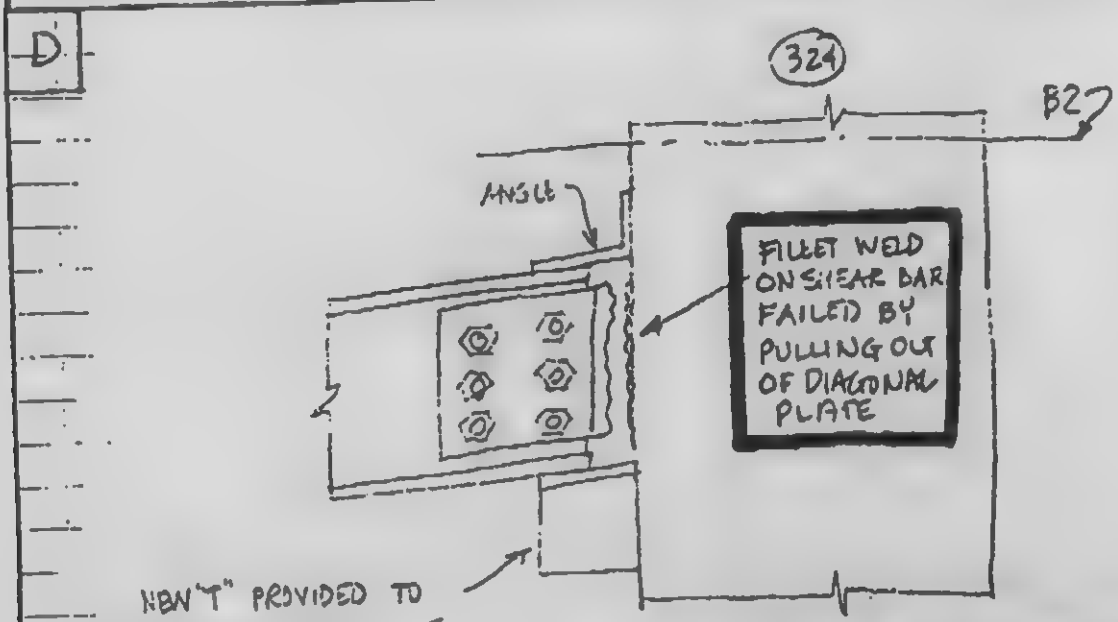

WEST ELEVATION

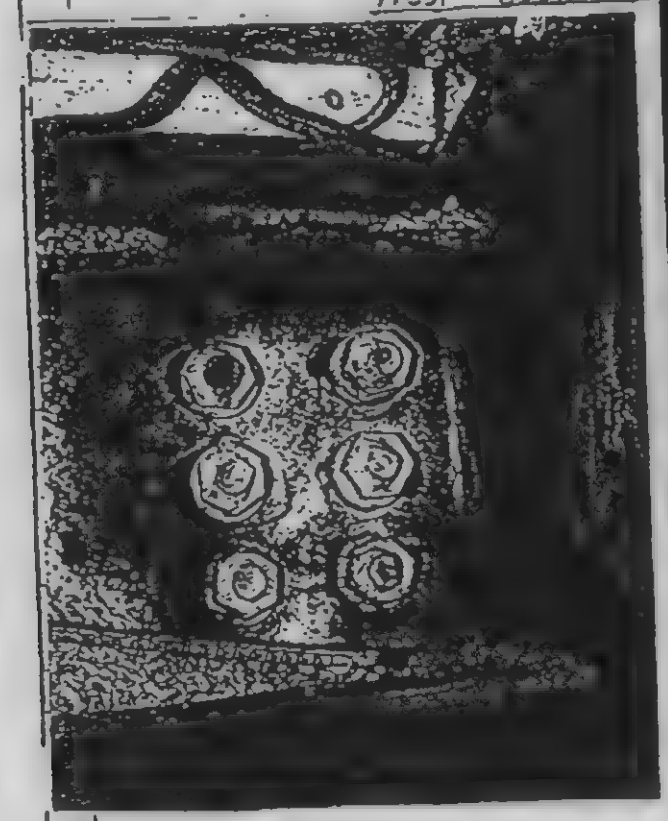

REV.	LERA LESLIE E. ROBERTSON ASSOCIATES CONSULTING STRUCTURAL ENGINEERS	P 1003119	DRAWING NO.
	WTC-STRUCTURAL INTEGRITY INVESTIGATION	DRAFT KEH	IN-TISW
	VISUAL INSPECTION	DESIGN KEH	6.2-26.5
	CONNECTION DAMAGE ASSESSMENT	CHECK	21 JUL 93

E

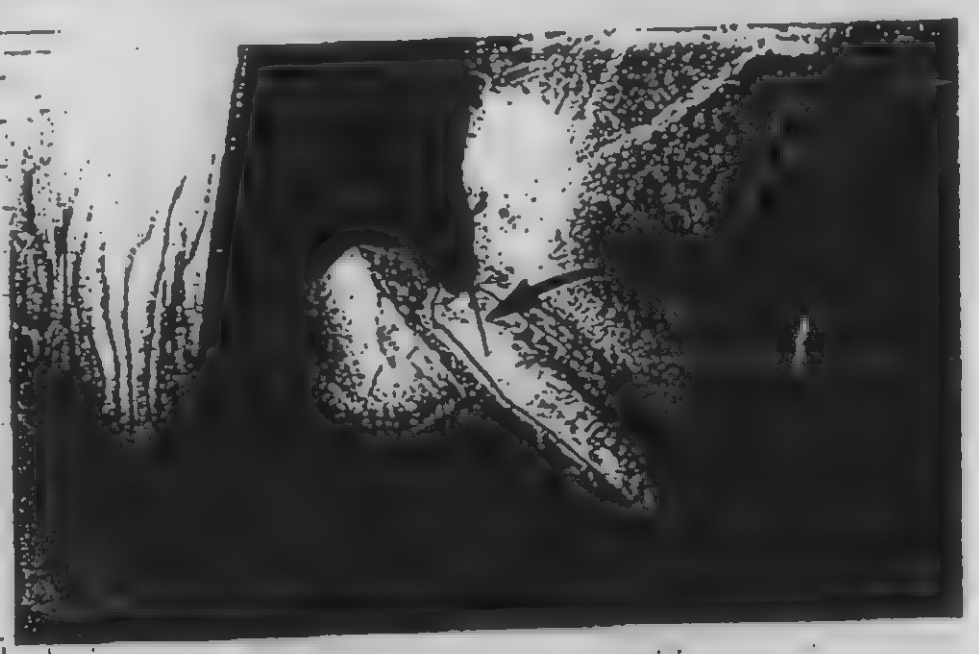

SITE OF TORN DIAGONAL - SOUTH VIEW

SITE OF TORN-OFF DIAGONAL - NORTH VIEW

REV.	LERA LESLIE E. ROBERTSON ASSOCIATES CONSULTING STRUCTURAL ENGINEERS	P 1003117	DRAWING NO.
	WTC- STRUCTURAL INTEGRITY INVESTIGATION	DRAFT KEH	IN-TISW 6.2-26.7
	VISUAL INSPECTION	DESIGN KEH	
	CONNECTION DAMAGE ASSESSMENT	CHECK	21 JUL 93

G

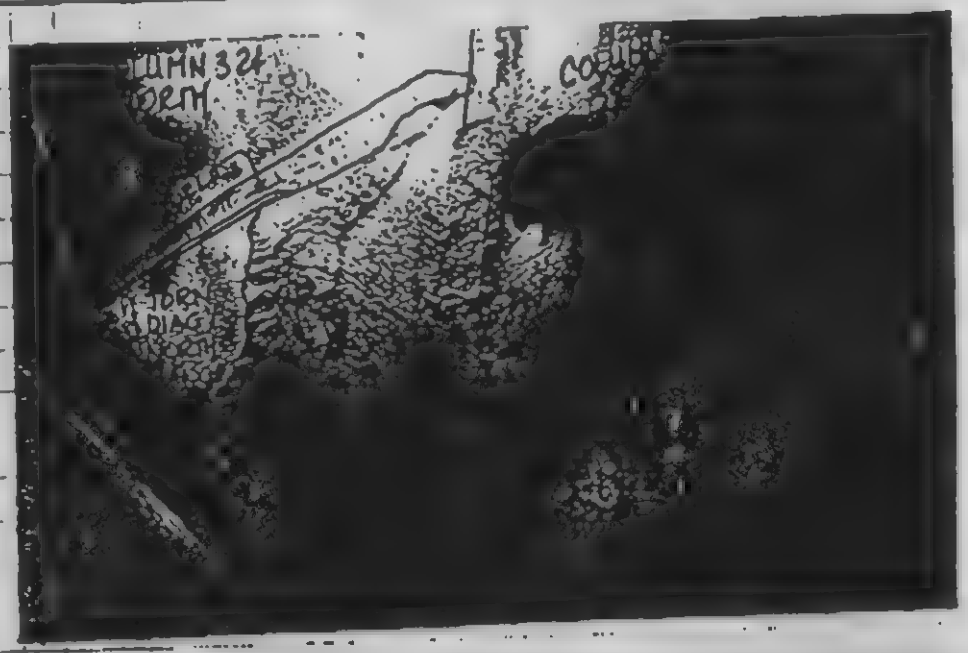

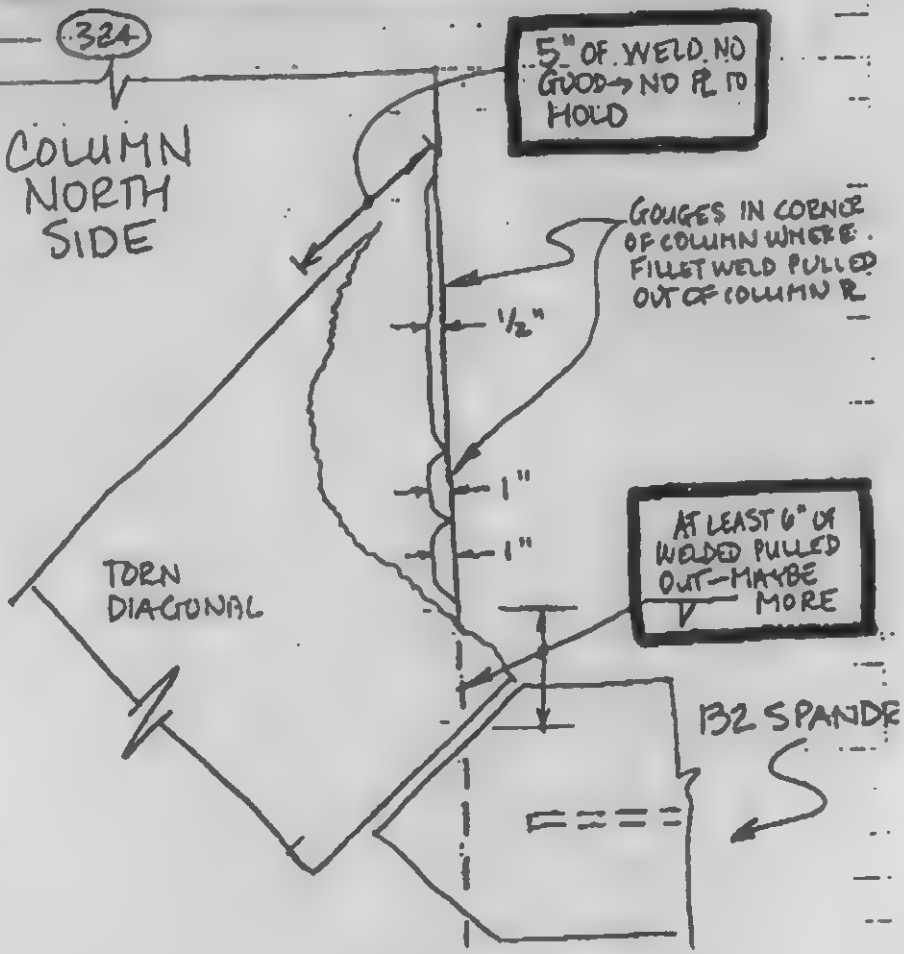

REV.	LERA LESLIE E. ROBERTSON ASSOCIATES CONSULTING STRUCTURAL ENGINEERS	P 1003119	DRAWING NO.
	WTC-STRUCTURAL INTEGRITY INVESTIGATION	DRAFT KEH	IN-TISW
	VISUAL INSPECTION	DESIGN KEH	6.2-27.2
	CONNECTION DAMAGE ASSESSMENT	CHECK	23 JUL 93

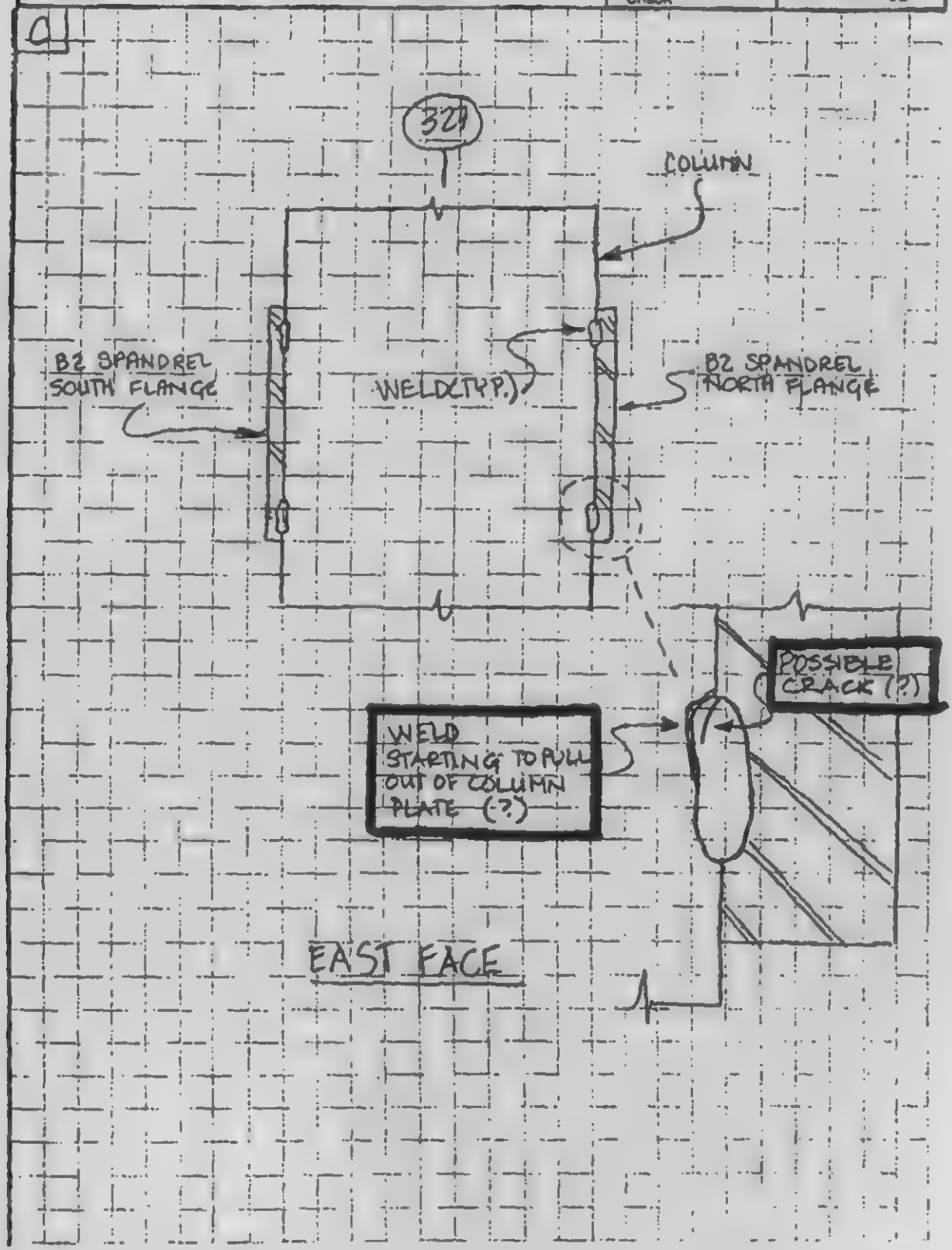

CONFIDENTIAL

REV.	LERA LESLIE E. ROBERTSON ASSOCIATES CONSULTING STRUCTURAL ENGINEERS	P \003119	DRAWING NO.
	WTC-STRUCTURAL INTEGRITY INVESTIGATION	DRAFT KEH	IN-T1SW
	VISUAL INSPECTION	DESIGN KEH	6.4-4.1
	SPANDREL DAMAGE ASSESSMENT	CHECK	21JUL93

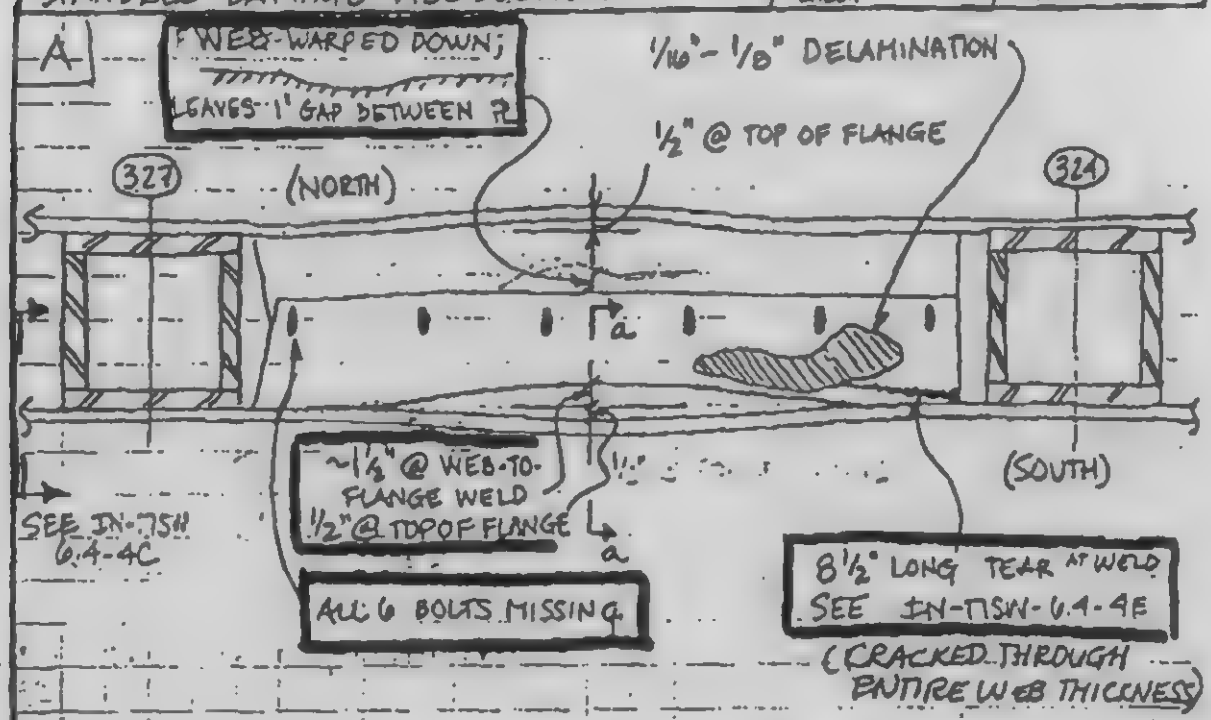

B1 SPANDREL-TOP VIEW

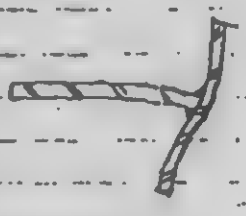

SECTION a-a

NOTE - MEASUREMENT OF BOWS IN PLATES ARE APPROXIMATE!

ALL 6 BOLTS MISSING - HOLES MISALIGNED

REV.	LERA LESLIE E. ROBERTSON ASSOCIATES CONSULTING STRUCTURAL ENGINEERS	P 1003119	DRAWING NO.
	WTC · STRUCTURAL INTEGRITY INVESTIGATION	DRAFT KEH	IN-TISW
	VISUAL INSPECTION	DESIGN KEH	6.4-4.2
	SPANDREL DAMAGE ASSESSMENT	CHECK	21 JUL 93

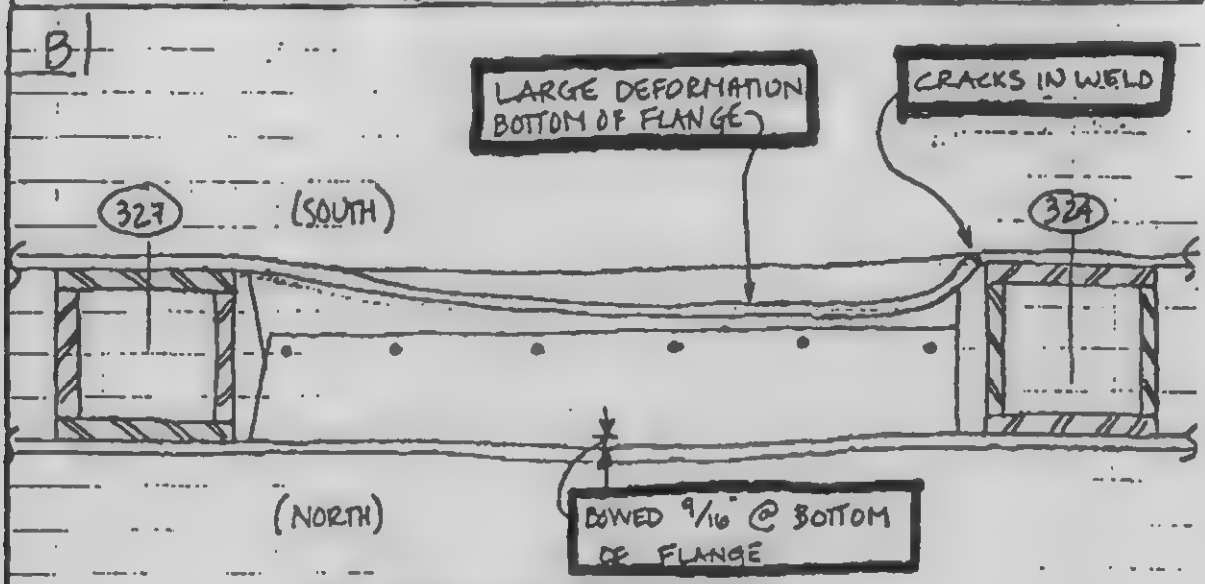

B1 SPANDREL - BOTTOM VIEW

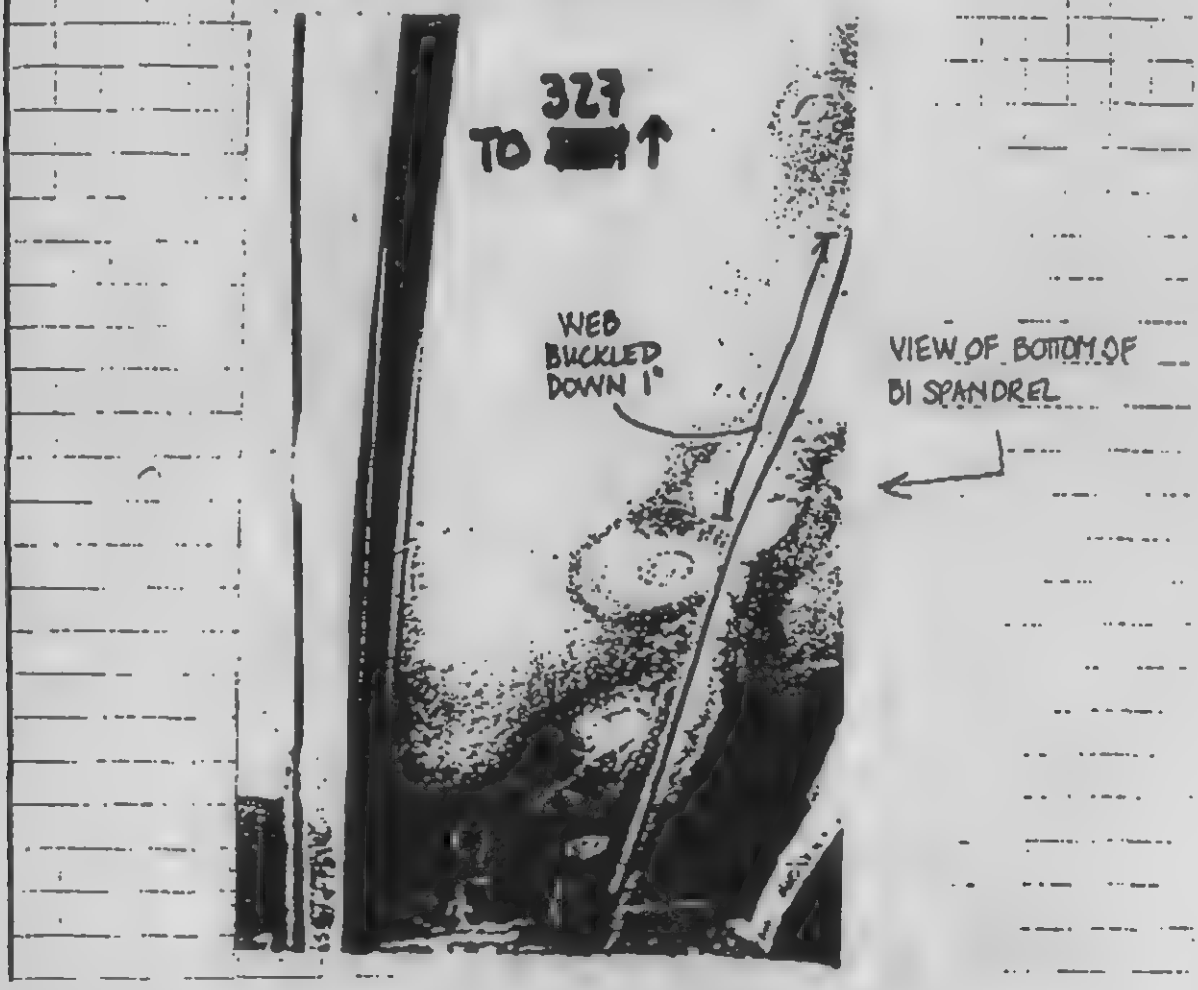

REV. **LERA** LESLIE E. ROBERTSON ASSOCIATES

DRAWING NO. IN-TISW 6.4-4.3

21 JUL 93

WTC STR. INT. INV.
VISUAL INSP. SPANDREL DAM. ASSESS.

B: (CON'T)

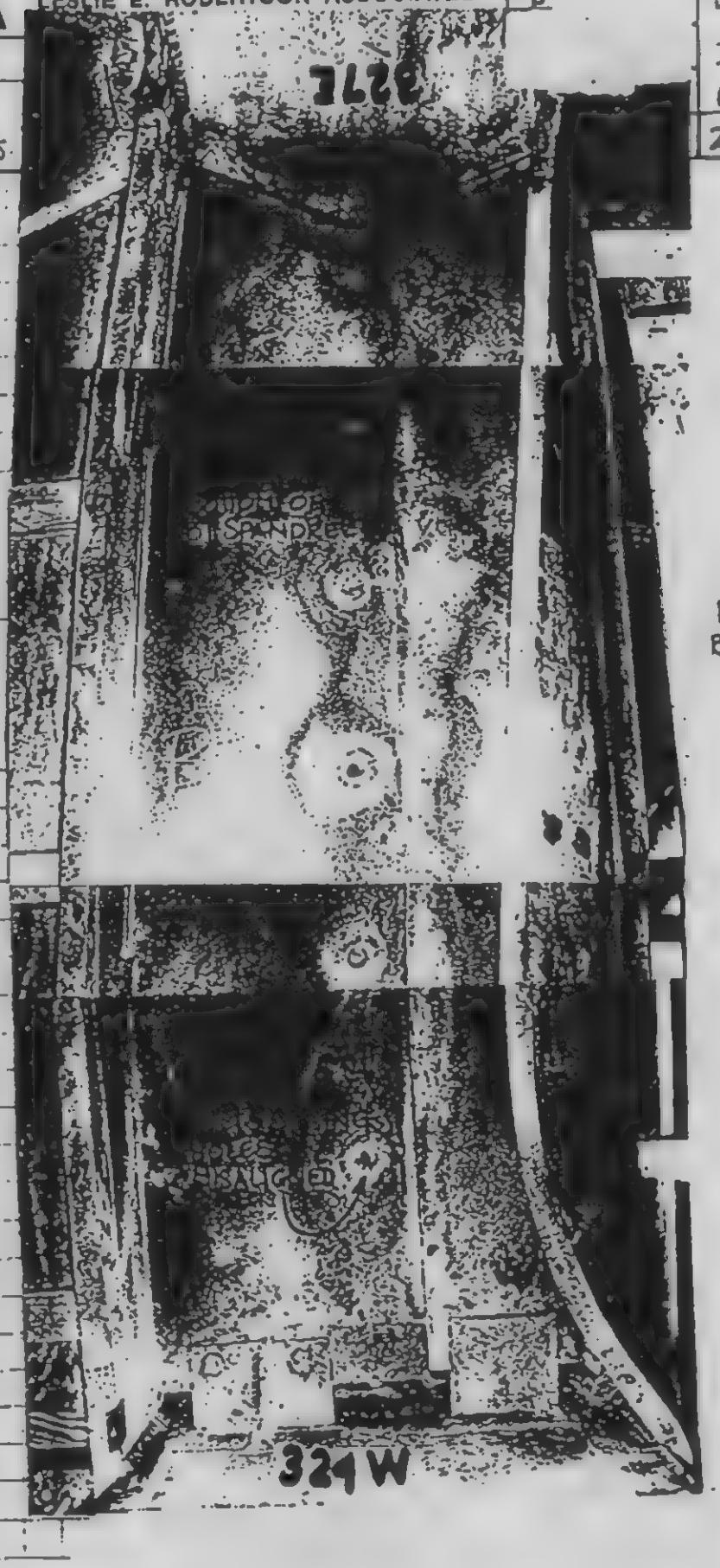

REV.	LERA LESLIE E. ROBERTSON ASSOCIATES CONSULTING STRUCTURAL ENGINEERS	P 1003119	DRAWING NO.
	WTC - STRUCTURAL INTEGRITY INVESTIGATION	DRAFT KEH	IN-TISW
	VISUAL INSPECTION	DESIGN KEH	6A-4.4
	SPANDREL DAMAGE ASSESSMENT	CHECK	21 JUL 93

C

SIGHTING ALONG SOUTH FLANGE OF B1 SPANDREL (FACING EAST) - NOTE OUTWARD BULGE OF TOP FLANGE

REV.	LERA LESLIE E. ROBERTSON ASSOCIATES CONSULTING STRUCTURAL ENGINEERS	P 1003119	DRAWING NO.
	WTC - STRUCTURAL INTEGRITY INVESTIGATION	DRAFT KEH	IN-TISW 6.4-4.5
	VISUAL INSPECTION SPANDREL DAMAGE ASSESSMENT	DESIGN KEH	
		CHECK	21 JUL 93

D

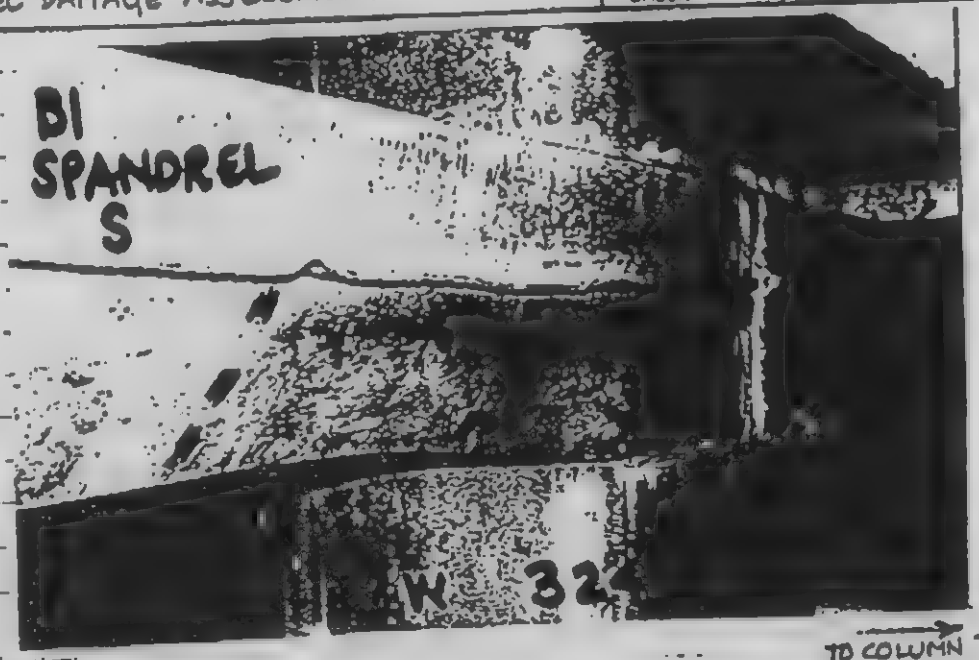

TO COLUMN 321

TO COLUMN 327

SOUTH FACE - BI SPANDREL

REV.	LERA LESLIE E. ROBERTSON ASSOCIATES CONSULTING STRUCTURAL ENGINEERS	P 1003119	DRAWING NO.
	WTC- STRUCTURAL INTEGRITY INVESTIGATION	DRAFT KEH	IN-TISW
	VISUAL INSPECTION	DESIGN KEH	6.1-4.6
	SPANDREL DAMAGE ASSESSMENT	CHECK	21 JUL 93

TOP VIEW

BOTTOM VIEW

REV.	LERA LESLIE E. ROBERTSON ASSOCIATES CONSULTING STRUCTURAL ENGINEERS	P 1003119	DRAWING NO.
	WTC-STRUCTURAL INTEGRITY INVESTIGATION	DRAFT KEH	IN-TISW
	VISUAL INSPECTION	DESIGN KEH	6.4-4.7
	SPANDREL DAMAGE ASSESSMENT	CHECK	21 JUL 93

E

NOTE OUTWARD BOW OF SPANDREL'S BOTTOM FLANGE

REV.	LERA LESLIE E. ROBERTSON ASSOCIATES CONSULTING STRUCTURAL ENGINEERS	P 1003119	DRAWING NO.
	WTC-STRUCTURAL INTEGRITY INVESTIGATION	DRAFT KEM	IN-TISW
	VISUAL INSPECTION SPANDREL DAMAGE ASSESSMENT	DESIGN KEM	6.4-5.1
		CHECK	21 JUL 93

A

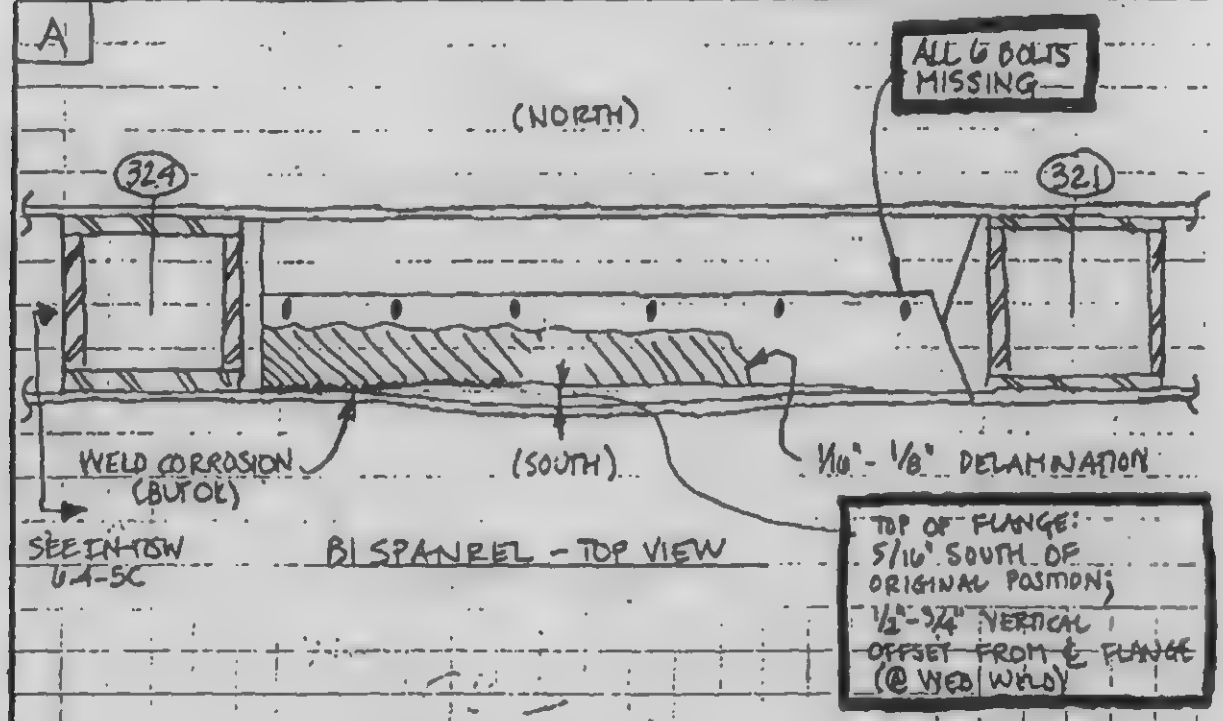

B SPANDREL - TOP VIEW

NOTE: MEASUREMENT OF BOWED PLATES IS APPROXIMATE DUE TO LACK OF STRAIGHT MEMBERS FROM WHICH TO MEASURE!

REV.	LERA LESLIE E. ROBERTSON ASSOCIATES CONSULTING STRUCTURAL ENGINEERS	P 1003119	DRAWING NO.
	WTC-STRUCTURAL INTEGRITY INVESTIGATION	DRAFT KEH	IN-TISW
	VISUAL INSPECTION	DESIGN KEH	6.4-5.3
	SPANDREL DAMAGE ASSESSMENT	CHECK	21 JUL 93

C

D

REV.	LERA LESLIE E. ROBERTSON ASSOCIATES CONSULTING STRUCTURAL ENGINEERS	P 1003119	DRAWING NO.
	WTC - STRUCTURAL INTEGRITY INVESTIGATION	DRAFT KEH	IN-T1SW
	VISUAL INSPECTION	DESIGN KEH	6.4-10
	SPANDREL DAMAGE ASSESSMENT	CHECK	21 JUL 93

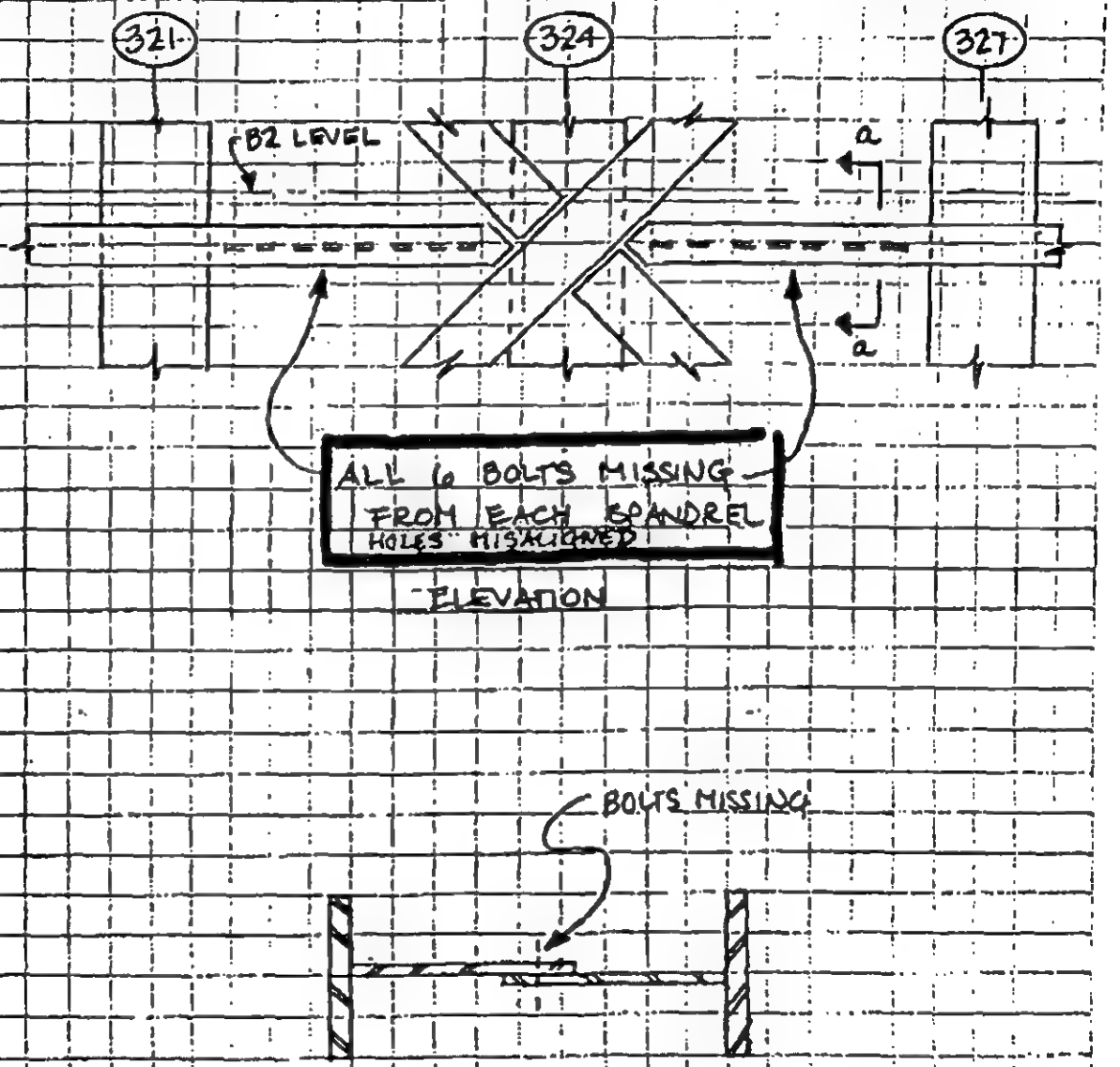

REV.	LERA LESLIE E. ROBERTSON ASSOCIATES CONSULTING STRUCTURAL ENGINEERS	P 1003119	DRAWING NO.
	WTC - STRUCTURAL INTEGRITY INVESTIGATION	DRAFT KEH	IN - TISW
	VISUAL INSPECTION	DESIGN KEH	6.6-2
	DIAGONAL DAMAGE ASSESSMENT	CHECK	21 JUL 93

A

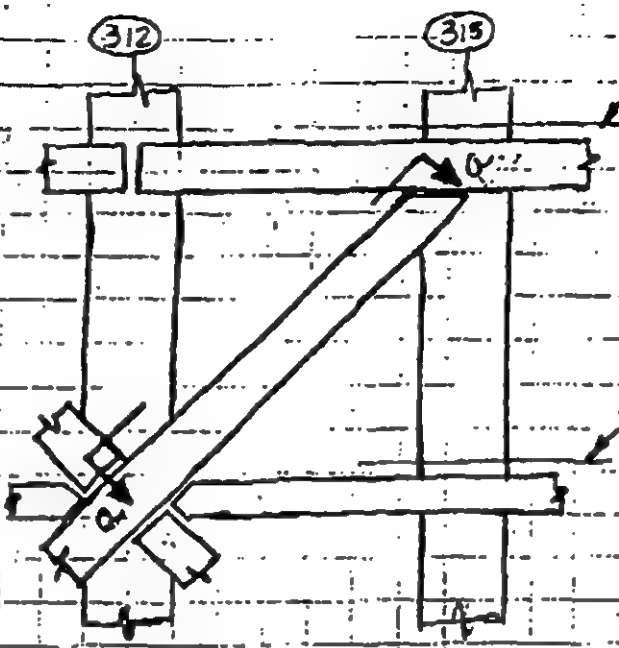

NORTH ELEVATION

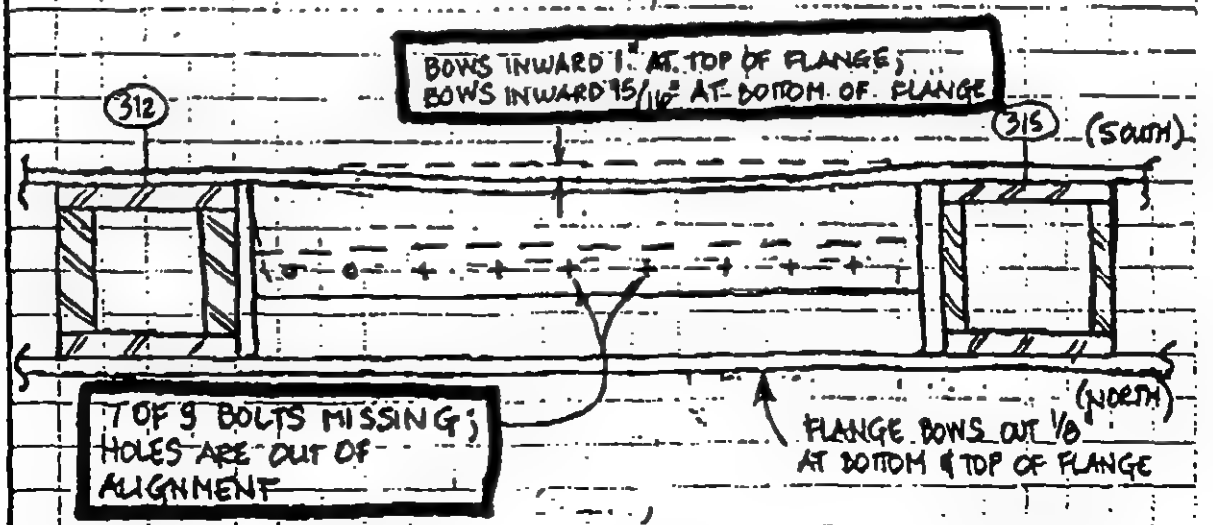

SECTION a-a

REV.	LERA LESLIE E. ROBERTSON ASSOCIATES CONSULTING STRUCTURAL ENGINEERS	P 1003119	DRAWING NO.
	WTC-STRUCTURAL INTEGRITY INVESTIGATION	DRAFT KEH	IN-T1SW
	VISUAL INSPECTION	DESIGN KEH	6.6-4
	DIAGONAL DAMAGE ASSESSMENT	CHECK	21 JUL 93

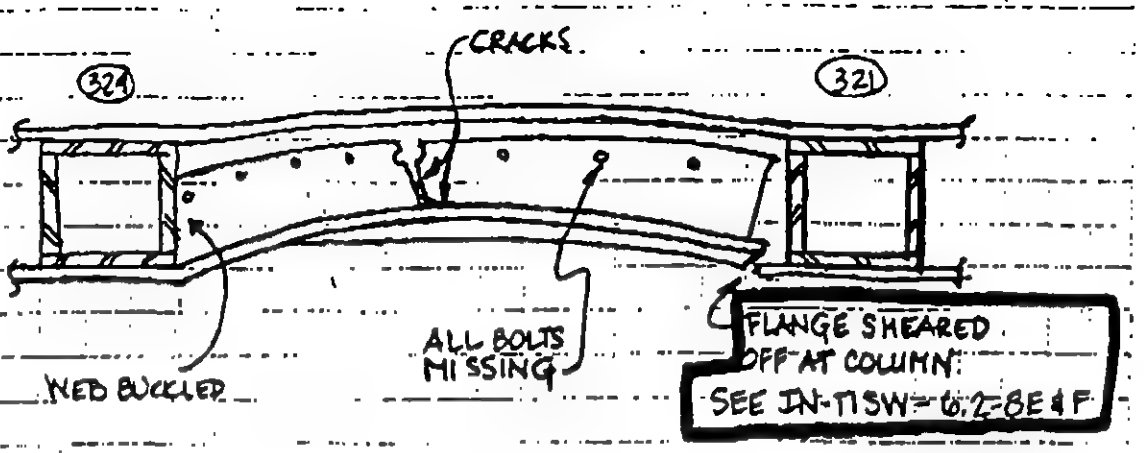

B1-B2 DIAGONAL - VIEW FROM ABOVE

CONCLUSION: DIAGONAL DAMAGED BEYOND REPAIR

MUST BE REPLACED

REV.	LERA LESLIE E. ROBERTSON ASSOCIATES CONSULTING STRUCTURAL ENGINEERS	P 1003119	DRAWING NO.
	WTC - STRUCTURAL INTEGRITY INVESTIGATION	DRAFT KEH	JN-TISW
	VISUAL INSPECTION	DESIGN KEH	6.6-6
	DIAGONAL DAMAGE ASSESSMENT	CHECK	21 JUL 93

C

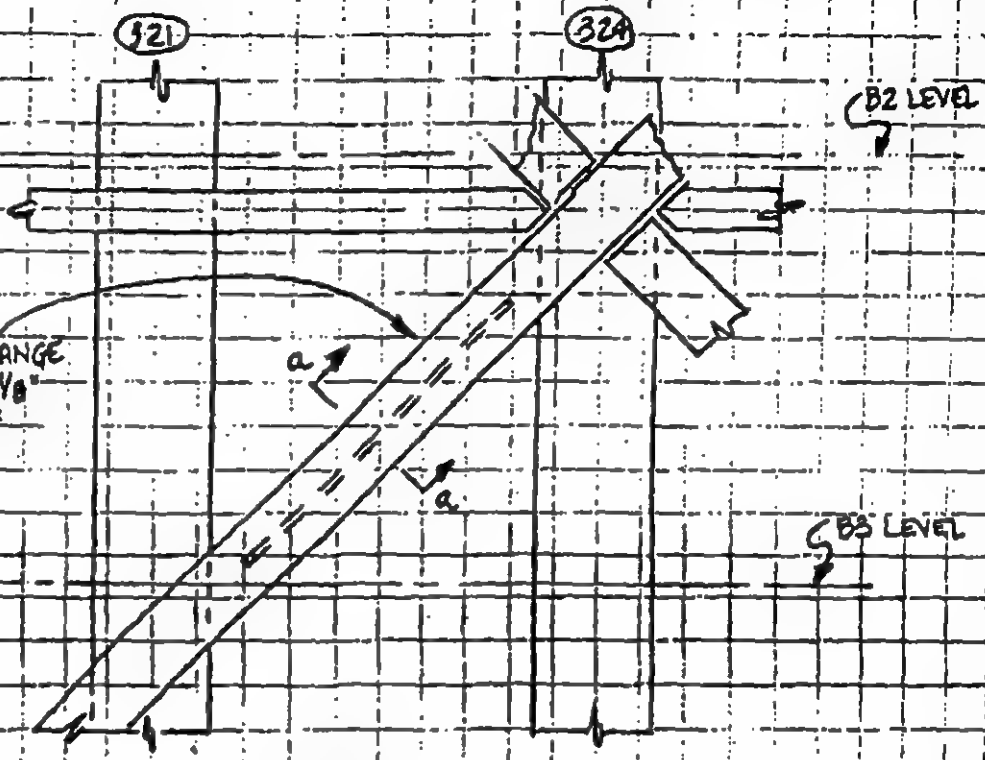

ELEVATION

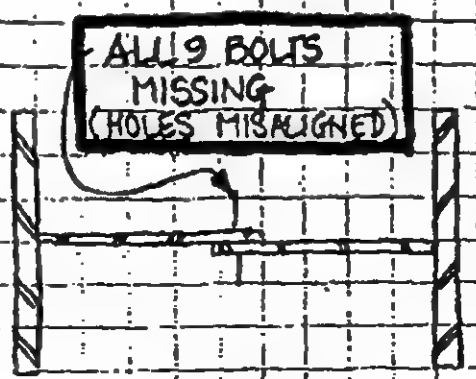

SECTION a-a

REV.	LERA LESLIE E. ROBERTSON ASSOCIATES CONSULTING STRUCTURAL ENGINEERS	P 1003113	DRAWING NO. IN-TISW 6.6-7
	WTC- STRUCTURAL INTEGRITY INVESTIGATION	DRAFT KEH	
	VISUAL INSPECTION	DESIGN KEH	
	DIAGONAL DAMAGE ASSESSMENT	CHECK	21 JUL 93

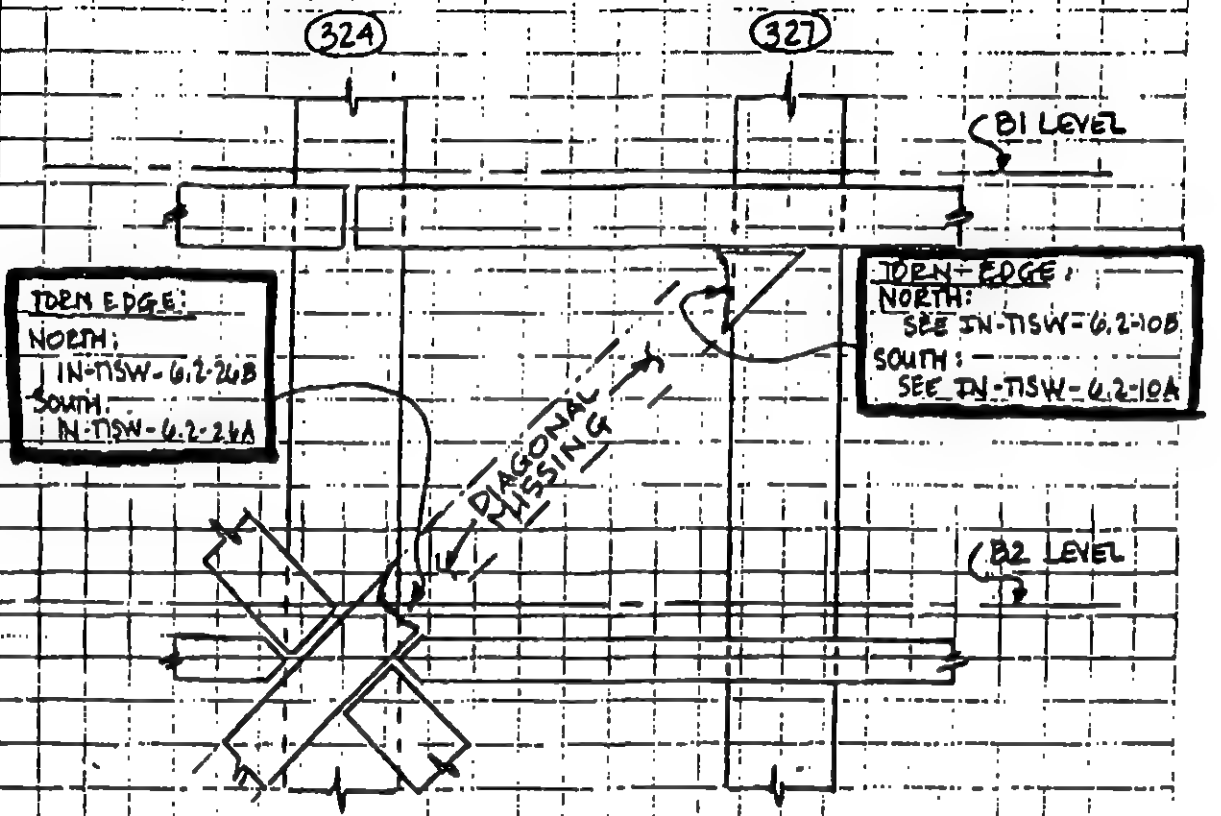

CONCLUSION: REPLACE MISSING DIAGONAL

REV.	LERA LESLIE E. ROBERTSON ASSOCIATES CONSULTING STRUCTURAL ENGINEERS	P1003118	DRAWING NO.
	WTC STRUCTURAL INTEGRITY INVESTIGATION	DRAFT RBG	IN-T1SW 7.1-1.1
	NON-DESTRUCTIVE TESTING	DESIGN RBG	
	STEEL BEAMS AND GIRDERS IWTC	CHECK	18 MAR 94

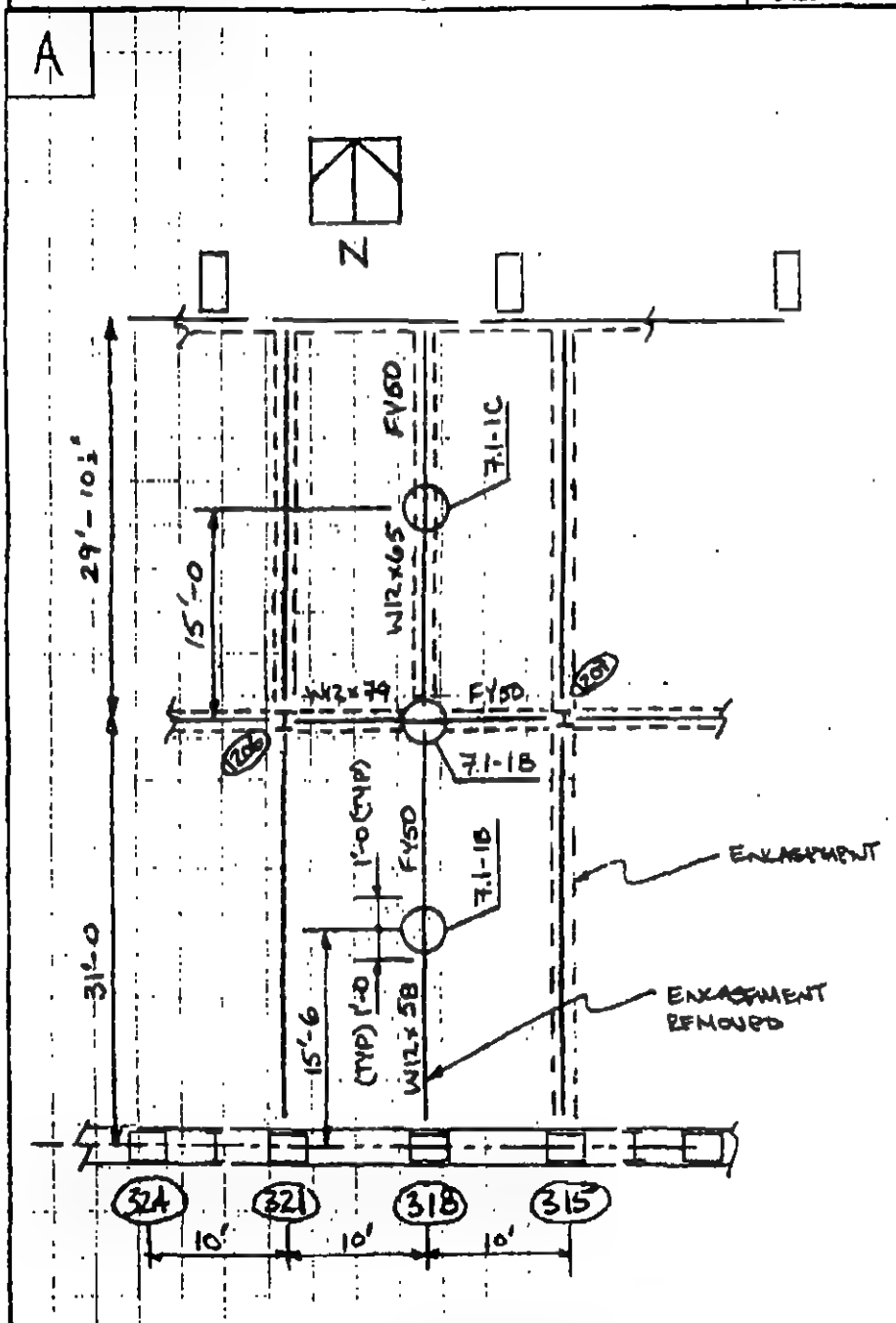

PART PLAN
B2 LEVEL
IWTC

NOTE: SEE IN-T1SW-7.1-1.2 FOR DETAILS

REV.	LERA LESLIE E. ROBERTSON ASSOCIATES CONSULTING STRUCTURAL ENGINEERS	P 1003118	DRAWING NO.
	WTC STRUCTURAL INTEGRITY INVESTIGATION	DRAFT RBG	IN-T1SW
	NON DESTRUCTIVE TESTING	DESIGN RBG	7.1-.1.2
	STEEL BEAMS AND GIRDERS 1 WTC	CHECK	18 MARCH 94

B

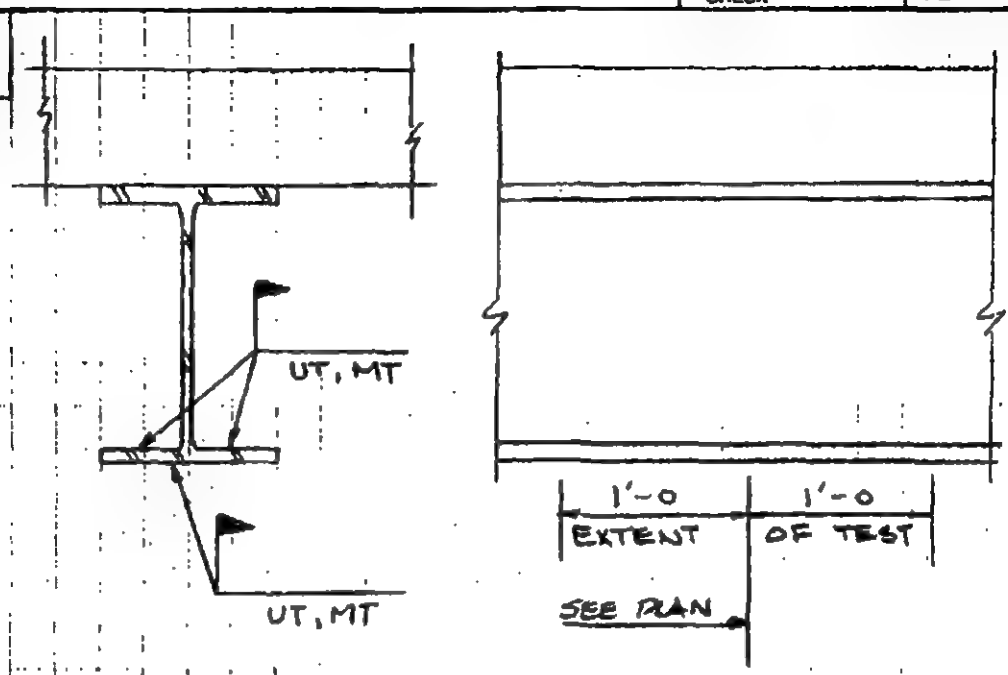

C

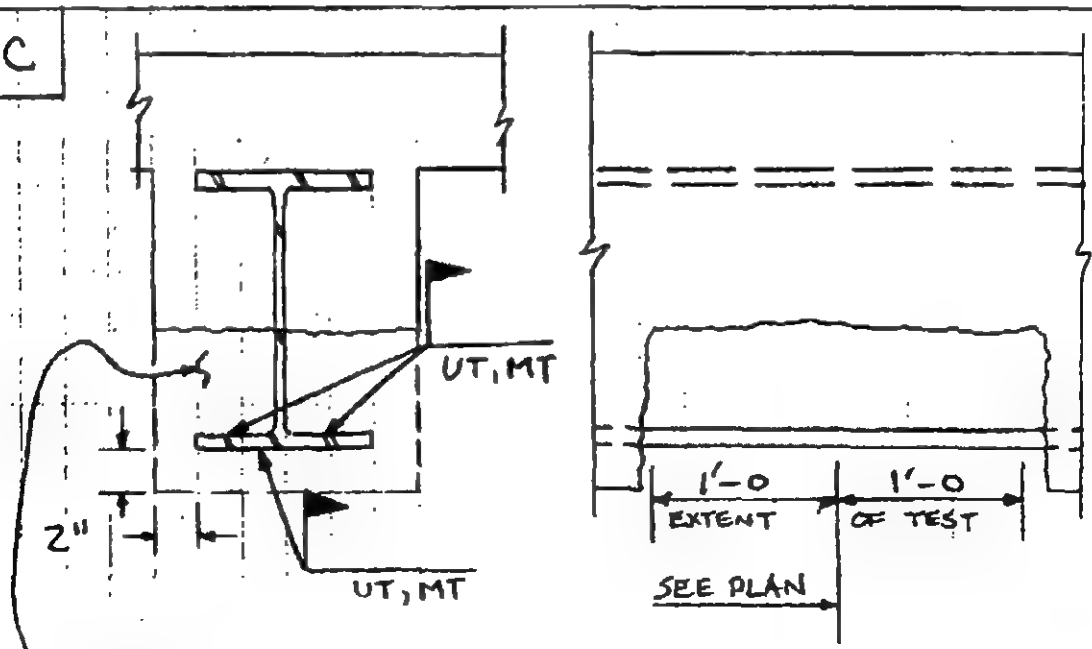

DEMOLISH ENCASEMENT AS REQUIRED TO PERFORM TESTS

REV.	LERA LESLIE E. ROBERTSON ASSOCIATES CONSULTING STRUCTURAL ENGINEERS	P1003118	DRAWING NO.
1 2.28.93	WTC - REPAIR	DRAFT CAH	R - 1
2 2.28.93	COLUMN (K-35 / 8) BRACING ELEVATION	DESIGN DAS	
3 3.4.93		CHECK	2-27-93
4 3.5.93			

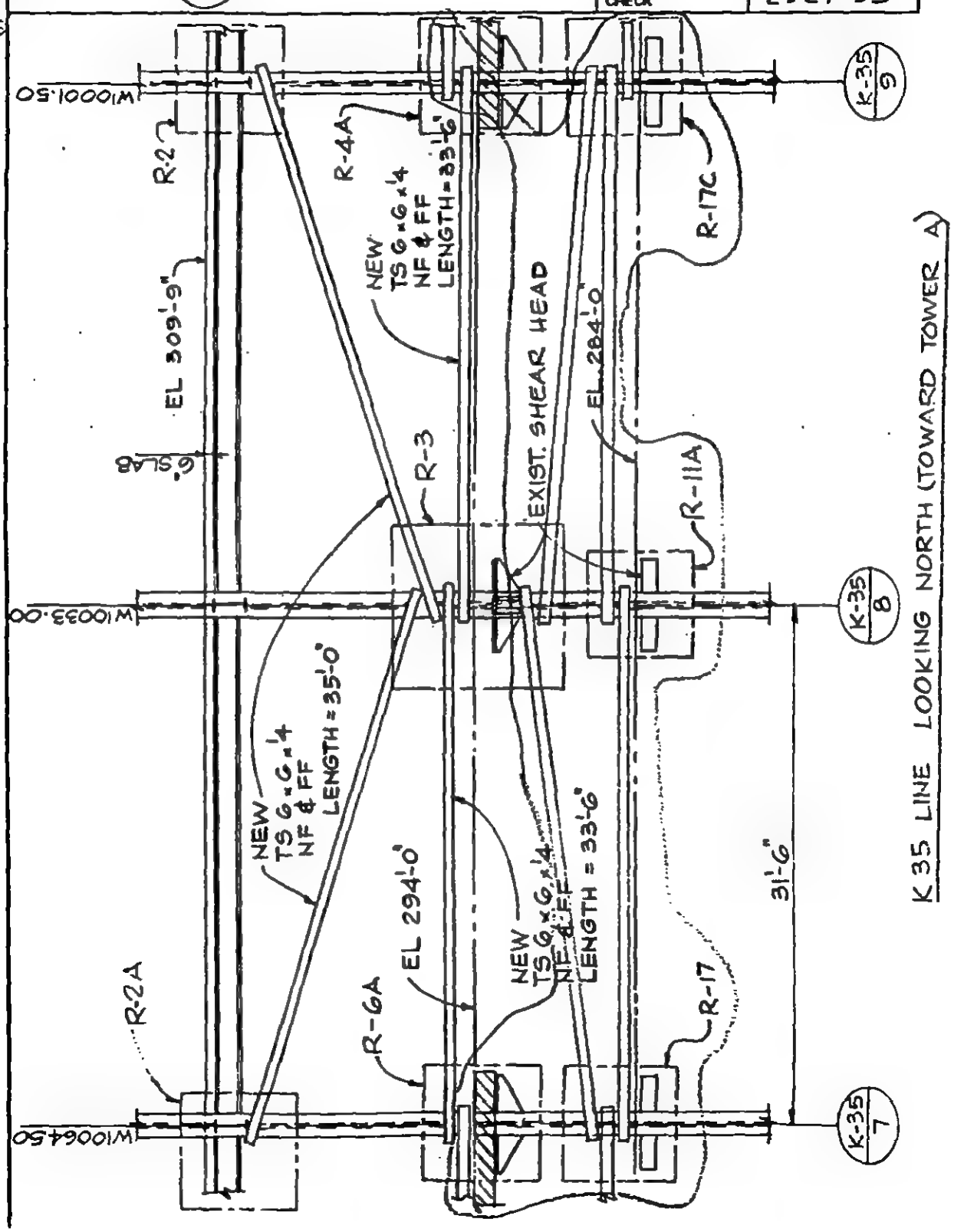

CONFIDENTIAL

EXP 003721

REV.	LERA LESLIE E. ROBERTSON ASSOCIATES CONSULTING STRUCTURAL ENGINEERS	P100 3118	DRAWING NO.
D 3/8/93	WTC - REPAIR	DRAFT CAH	R-1A
	COLUMN (K-31/8) . BRACING ELEVATION	DESIGN DAS	
		CHECK	3.4.93

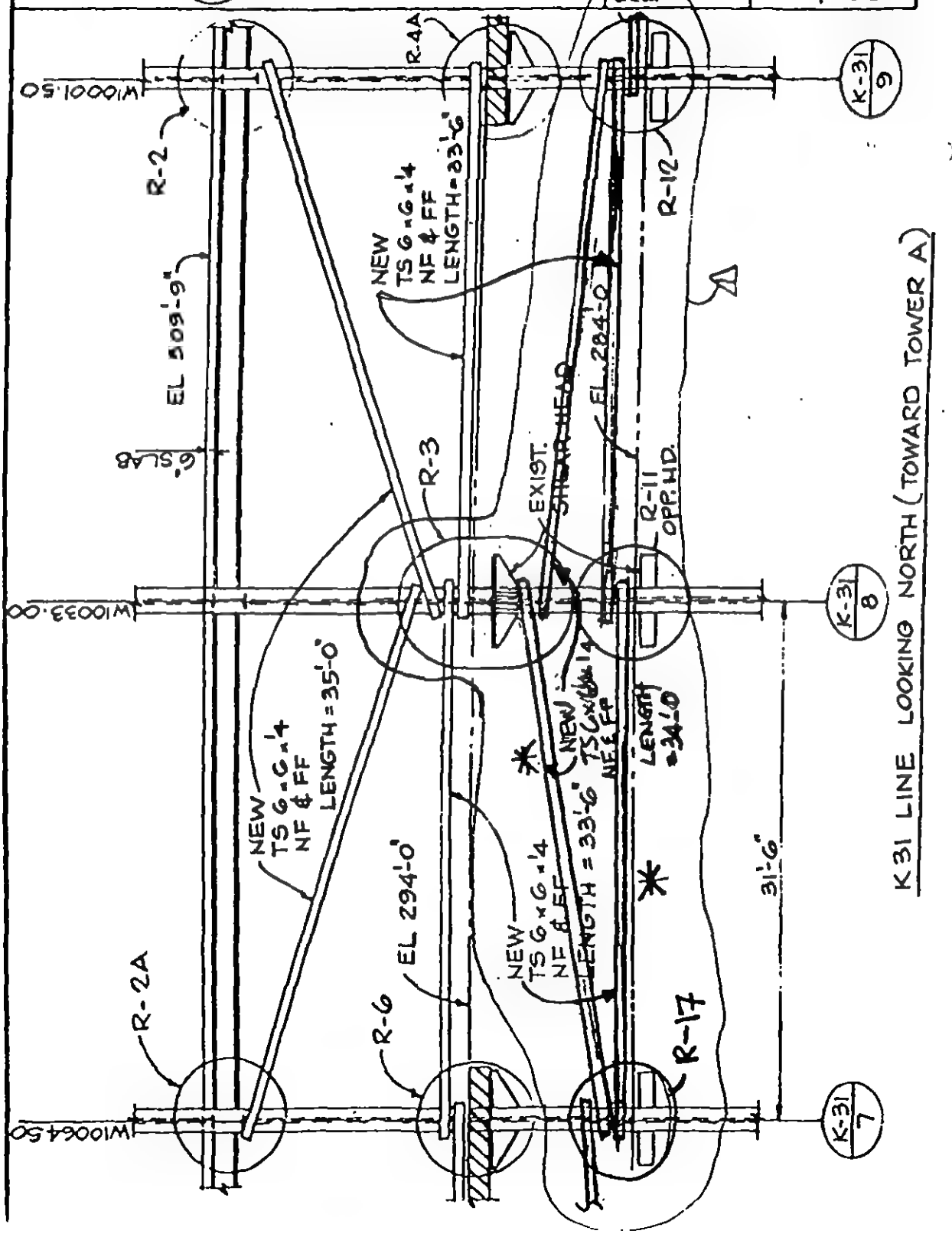

CONFIDENTIAL

EXP 003722

REV.	LERA LESLIE E. ROBERTSON ASSOCIATES CONSULTING STRUCTURAL ENGINEERS	P100 3118	DRAWING NO.
1 2.28.93	WTC REPAIR	DRAFT CAH	R-2
2 3.4.93	COLUMNS (K-31/9) & (K-35/9) BRACING DETAIL	DESIGN DAS	
3 3.9.93		CHECK WJF	2-27-93

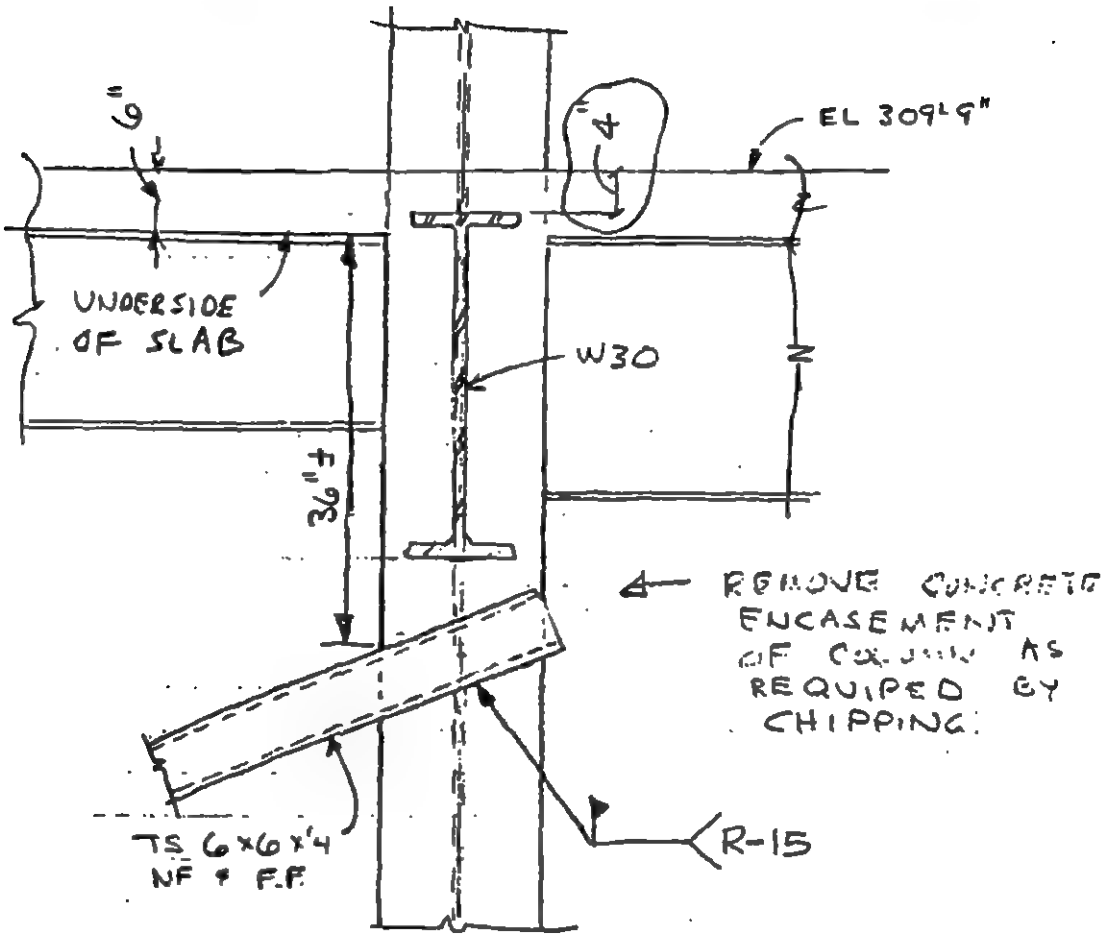

ELEVATION

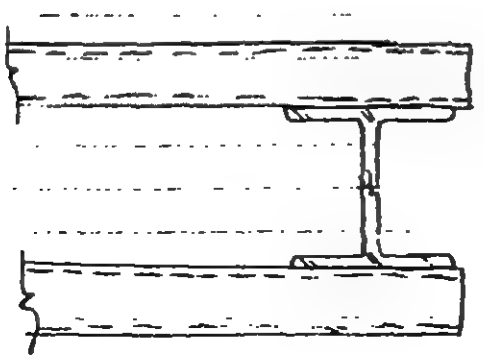

PLAN

REV.	LERA LESLIE E. ROBERTSON ASSOCIATES CONSULTING STRUCTURAL ENGINEERS	P100 3118	DRAWING NO.
1 3. 93	WTC REPAIR	DRAFT CAH	R-2A
	COLUMNS (K-31/7) & (K-33/7) BRACING DETAIL	DESIGN DAS	
		CHECK	3.4.93

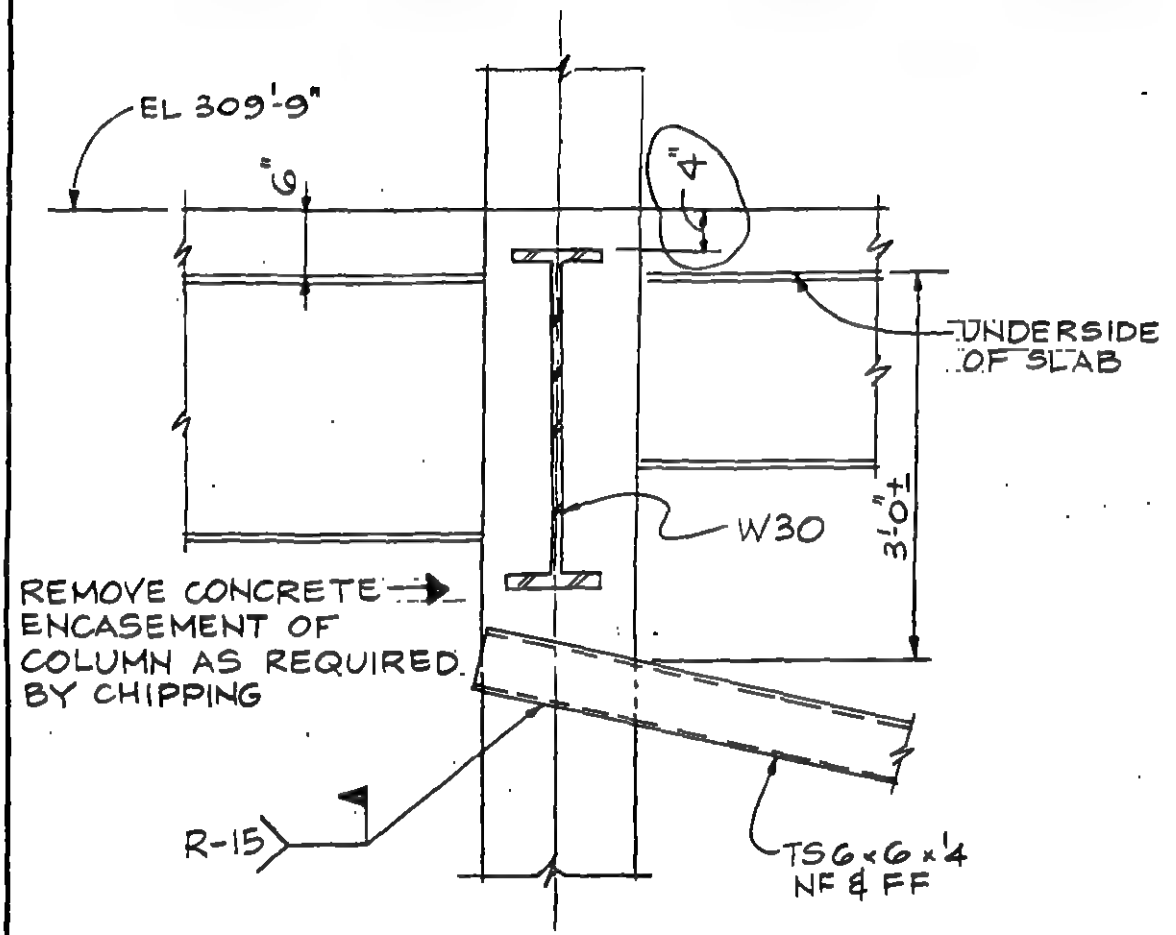

ELEVATION

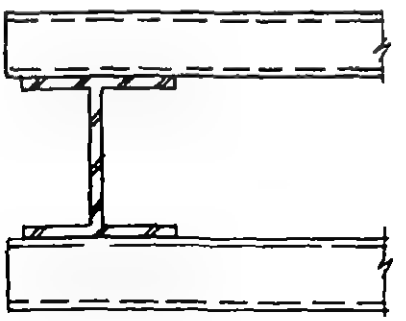

PLAN

CONFIDENTIAL

EXP 003724

REV.	LERA LESLIE E. ROBERTSON ASSOCIATES CONSULTING STRUCTURAL ENGINEERS	P100 3118	DRAWING NO.
1 2.28.93	WTC REPAIR	DRAFT CAH	R - 3
2 2.28.93	COLUMNS (K-31/8) & (K-35/8) BRACING DETAIL	DESIGN DAS	
3 3.4.93		CHECK	2-27-93
4 3-8-93			

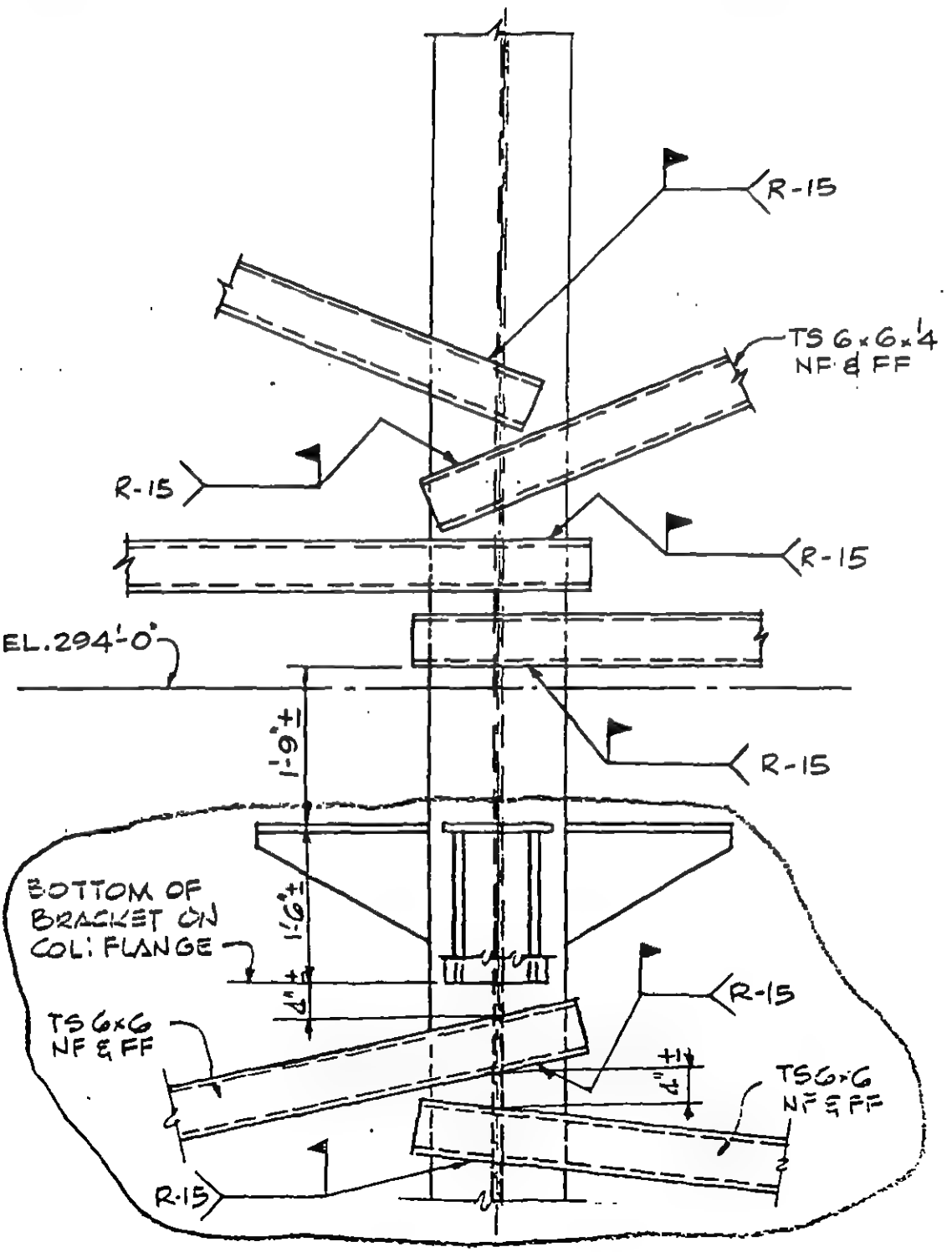

CONFIDENTIAL

EXP 003725

REV.	LERA LESLIE E. ROBERTSON ASSOCIATES CONSULTING STRUCTURAL ENGINEERS	P1003118	DRAWING NO.
1 2-28-93	WTC REPAIR	DRAFT CAH	R-4
2 3-4-93	COLUMN (K-31/6) BRACING DETAIL	DESIGN WJP	
		CHECK	2-28-93

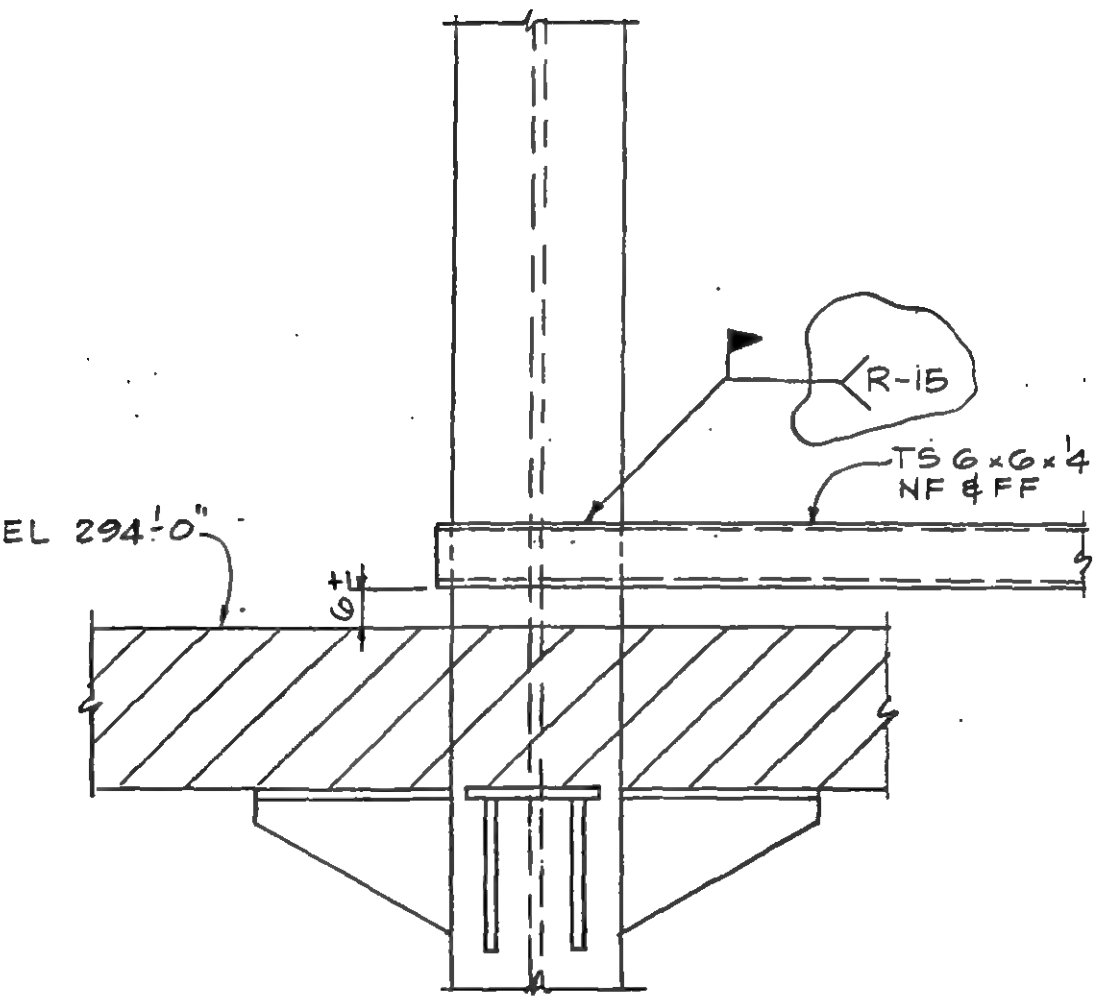

X

CONFIDENTIAL

EXP 003726

REV.	LERA LESLIE E. ROBERTSON ASSOCIATES CONSULTING STRUCTURAL ENGINEERS	P100 3118	DRAWING NO.
1 3·93	WTC REPAIR	DRAFT CAH	R-4A
	COLUMN K-35/9 BRACING DETAIL	DESIGN	
		CHECK	3.4.93

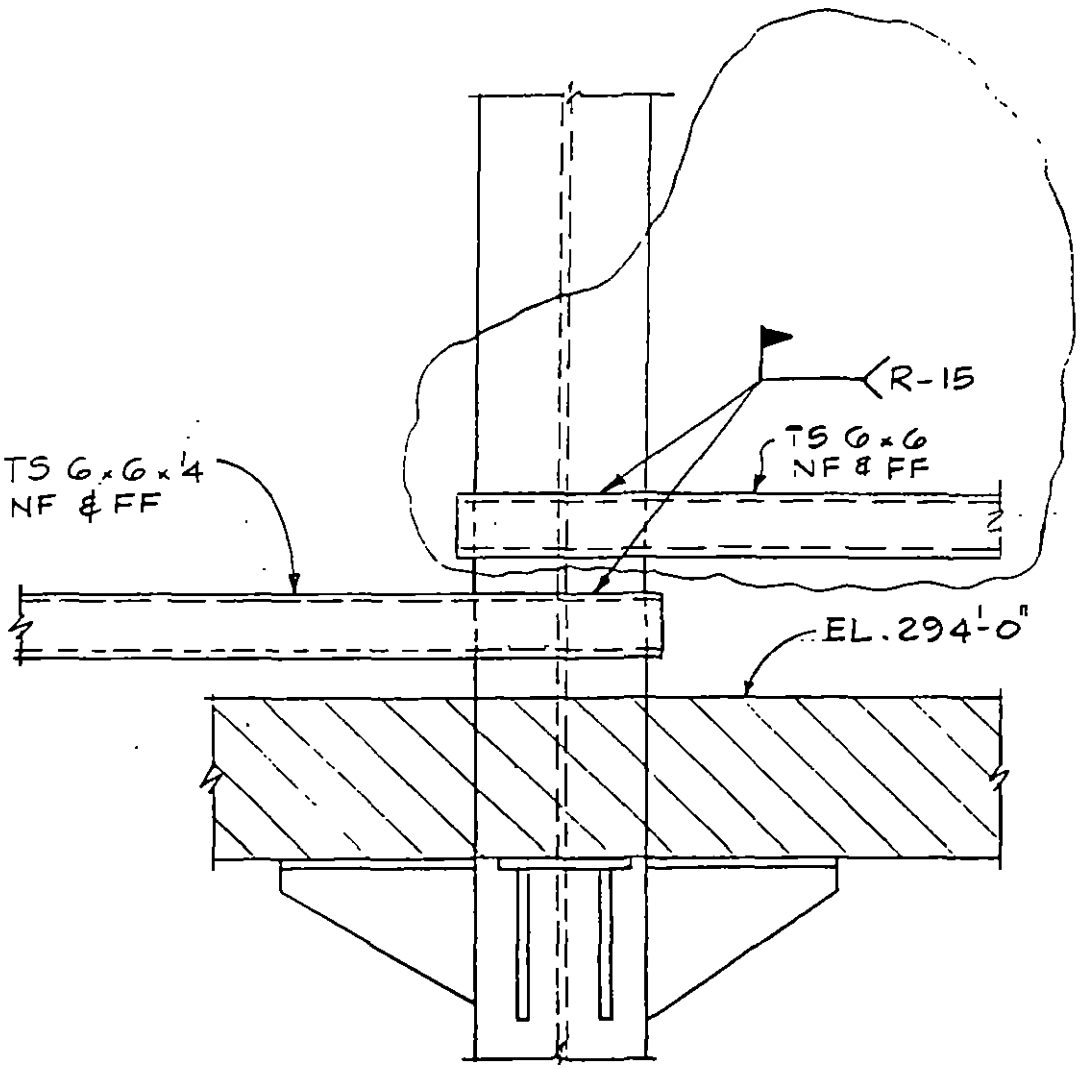

X

REV.	LERA LESLIE E. ROBERTSON ASSOCIATES CONSULTING STRUCTURAL ENGINEERS	P100 311B	DRAWING NO.
1 3-4-93	WTC	DRAFT CAH	R-5
	COLUMN (K31/7) BRACING ELEVATION	DESIGN DAS	
		CHECK WJF	2-28-93

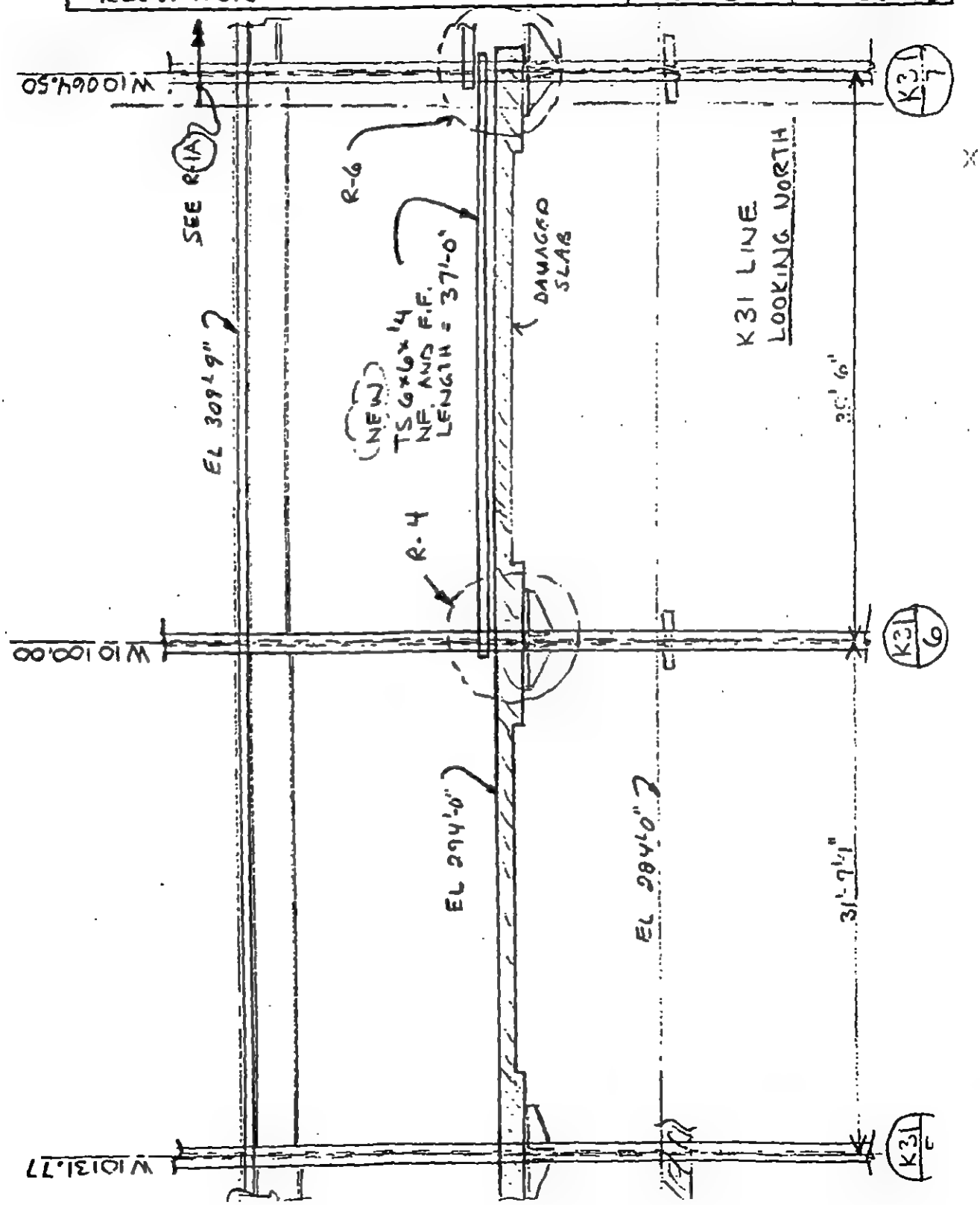

CONFIDENTIAL

EXP 003728

REV.	LERA LESLIE E. ROBERTSON ASSOCIATES CONSULTING STRUCTURAL ENGINEERS	P1003118	DRAWING NO.
3-93	WTC REPAIR	DRAFT CAH	R-6
	COLUMN K-31/7 BRACING DETAIL	DESIGN WJP	
		CHECK	3-4-93

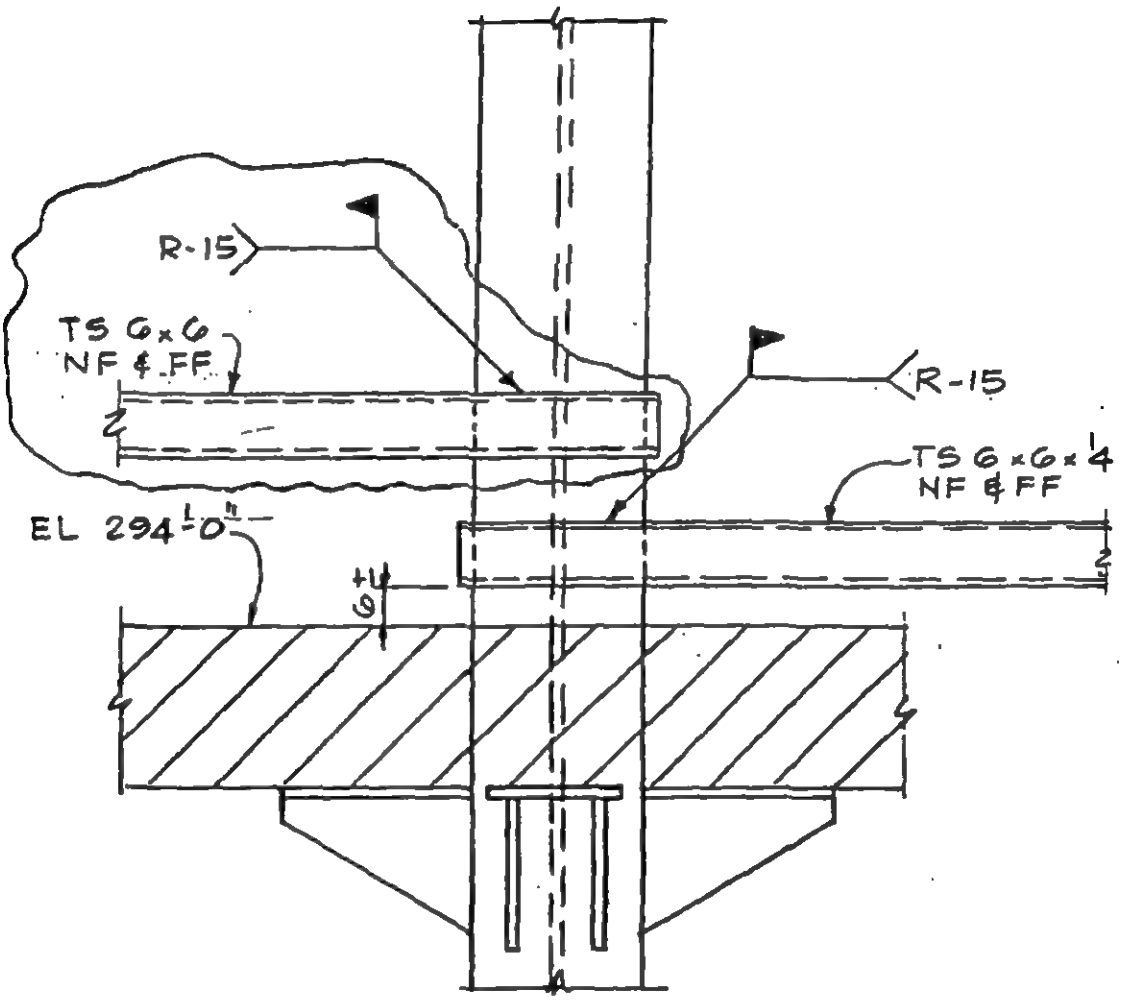

REV.	LERA LESLIE E. ROBERTSON ASSOCIATES CONSULTING STRUCTURAL ENGINEERS	P100 3118	DRAWING NO.
	WTC REPAIR	DRAFT SLS	R-7
	BRACING ELEVATION COLUMNS K-37/7 K-37/8 K-37/9	DESIGN AMA/SLS	
		CHECK	4 MAR 93

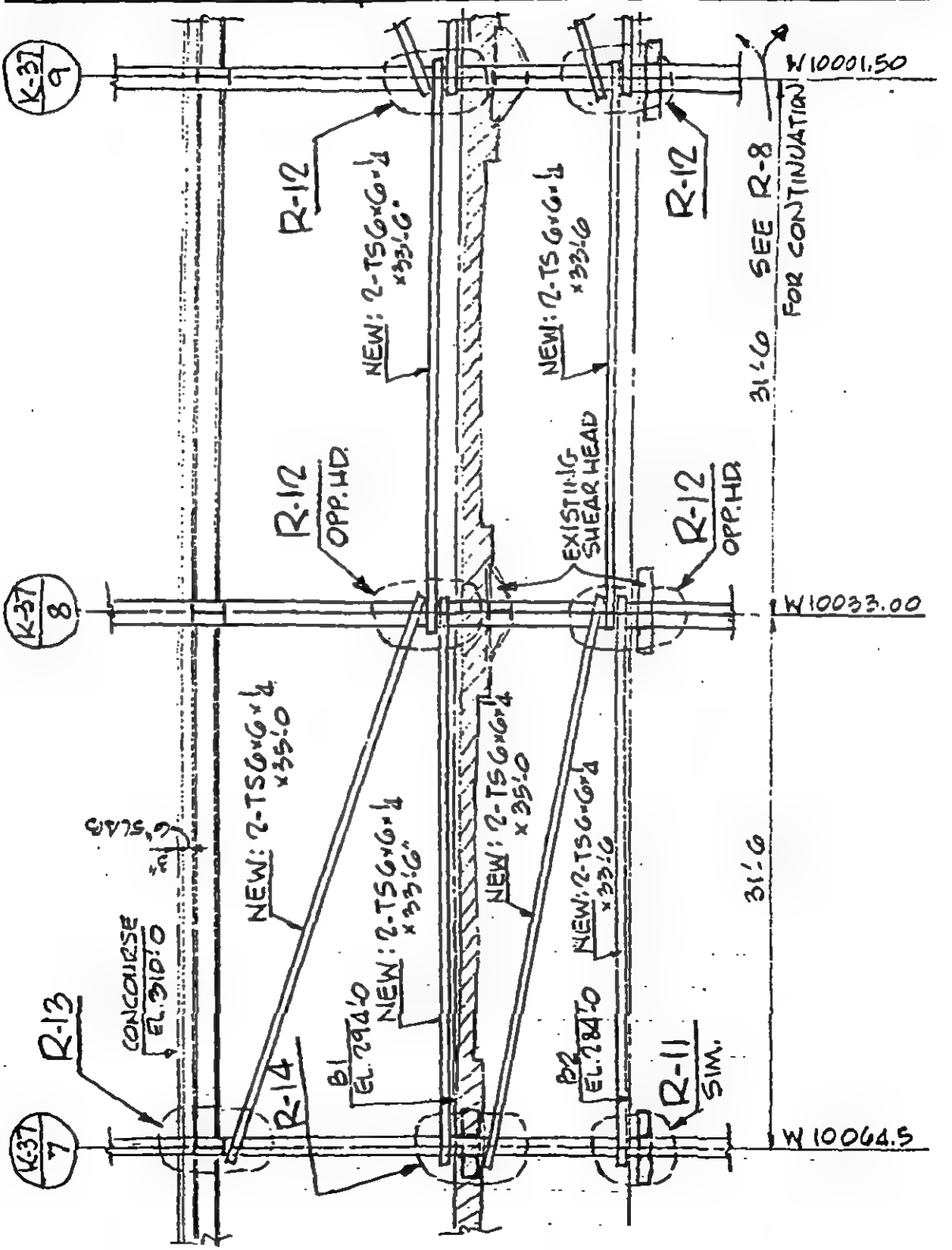

CONFIDENTIAL

EXP 003730

REV.	LERA LESLIE E. ROBERTSON ASSOCIATES CONSULTING STRUCTURAL ENGINEERS	P1003118	DRAWING NO.
	WTC REPAIR	DRAFT SLS	R-9
	BRACING ELEVATION COLUMNS K-41/9 K-41/8 K-41/9	DESIGN AMA/SLS	
		CHECK	4 MAR 93

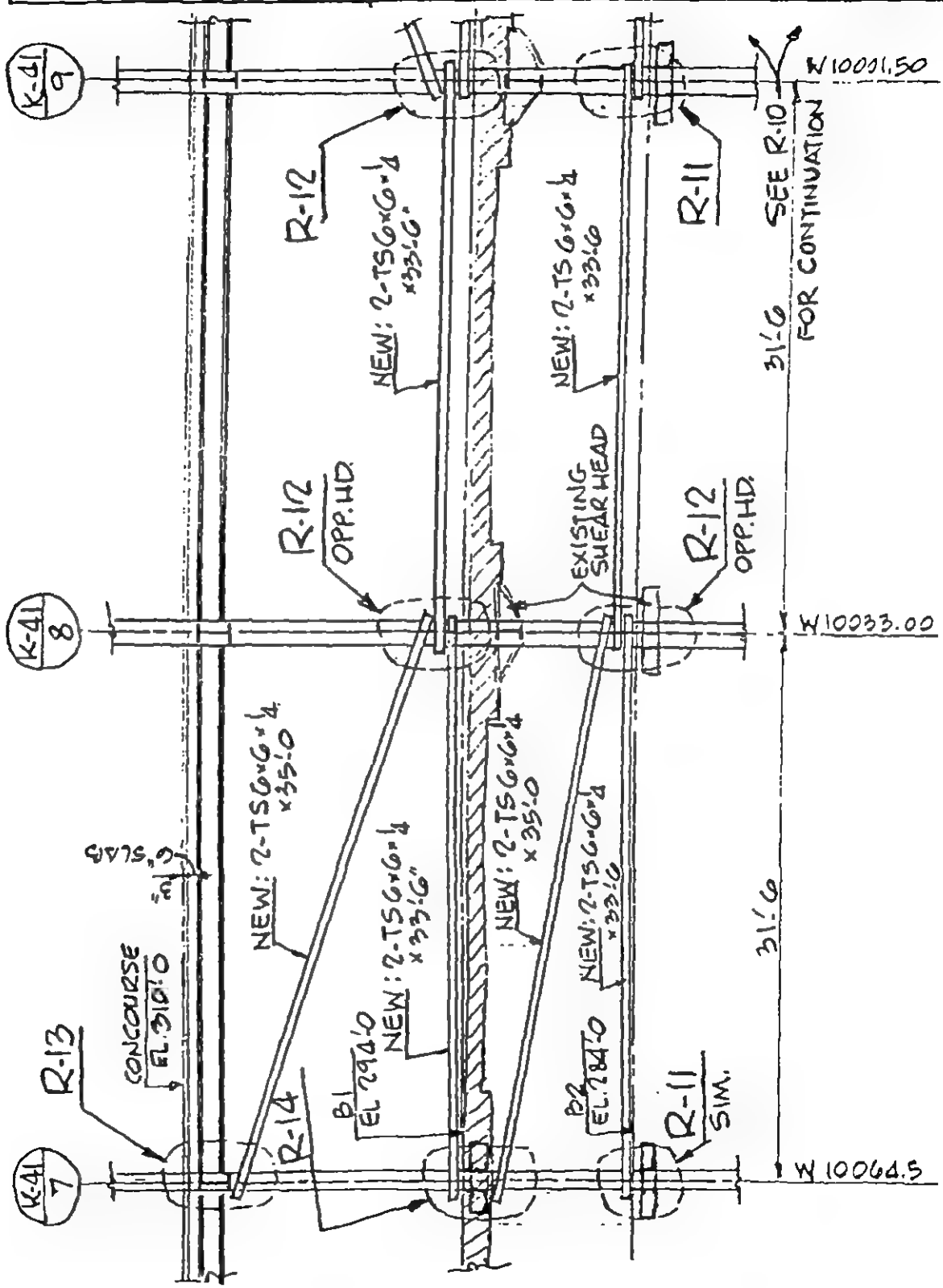

CONFIDENTIAL

EXP 003731

REV.	LERA LESLIE E. ROBERTSON ASSOCIATES CONSULTING STRUCTURAL ENGINEERS	P1003118	DRAWING NO.
	WTC REPAIR	DRAFT SLS	R-11
	BRACING STRUT CONNECTION TO COLUMN	DESIGN ELS	
		CHECK	4 MAR 93

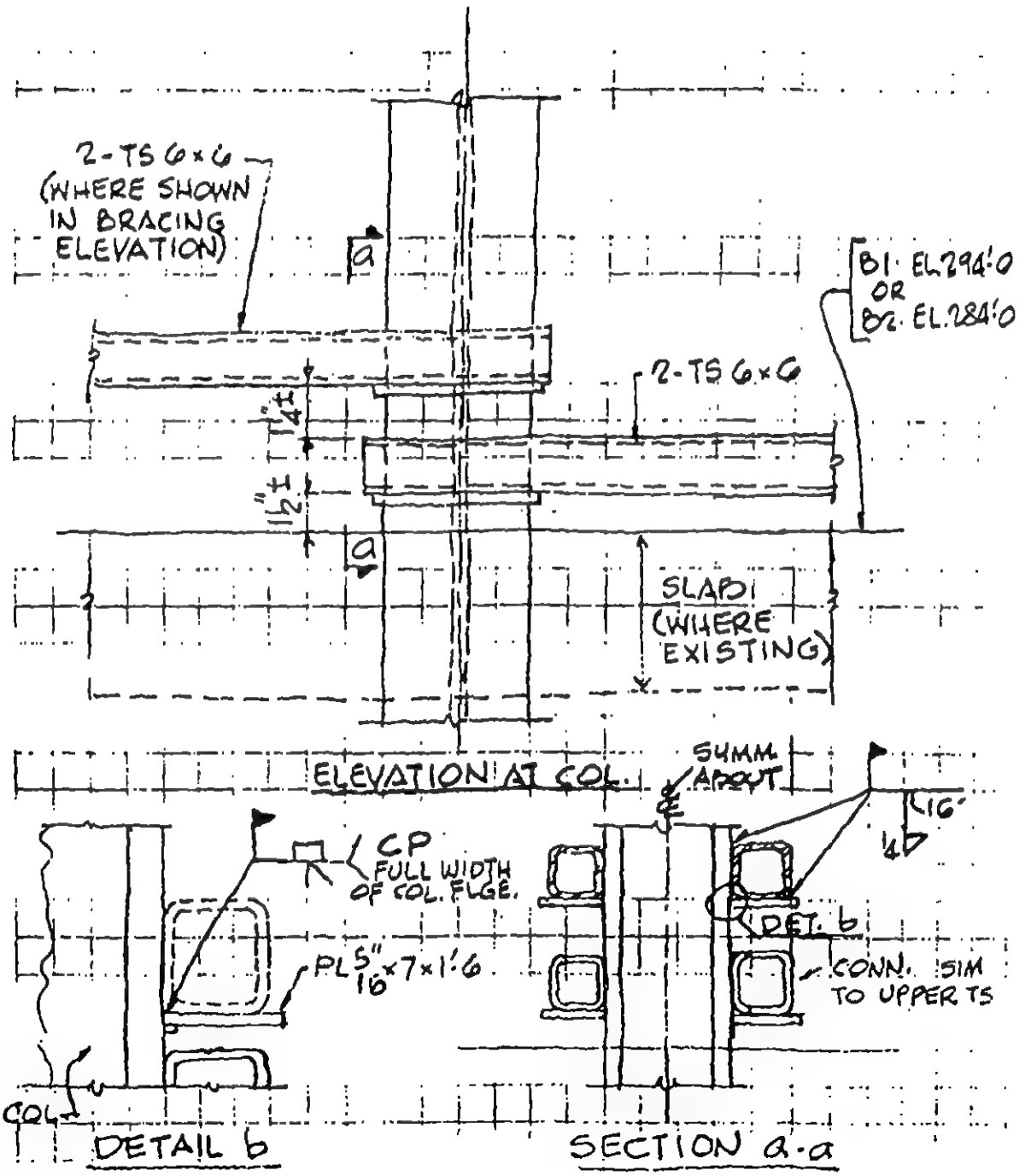

CONFIDENTIAL

EXP 003732

REV.	LERA LESLIE E. ROBERTSON ASSOCIATES CONSULTING STRUCTURAL ENGINEERS	P 1003118	DRAWING NO.
A 3/5/93	WTC REPAIR	DRAFT SLS	R-12
	BRACING STRUT CONNECTION TO COLUMN	DESIGN EL S	
		CHECK	4 MAR 93

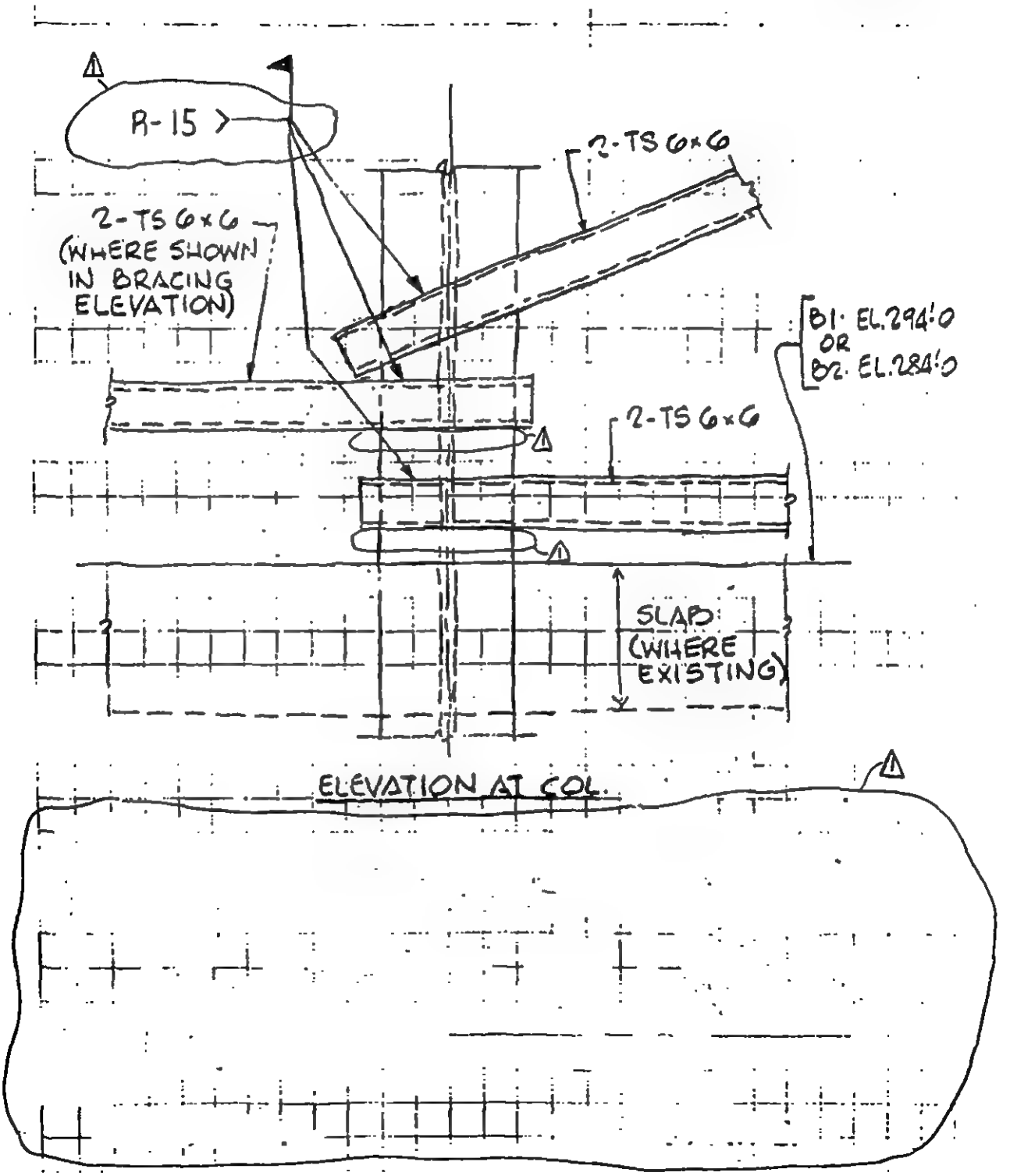

REV.	LERA LESLIE E. ROBERTSON ASSOCIATES CONSULTING STRUCTURAL ENGINEERS	P1003118	DRAWING NO.
	WTC REPAIR	DRAFT SLS	R-13
	COLUMNS (K37/7) & (K41/7) BRACING DETAIL	DESIGN SLS	
		CHECK	3-5-93

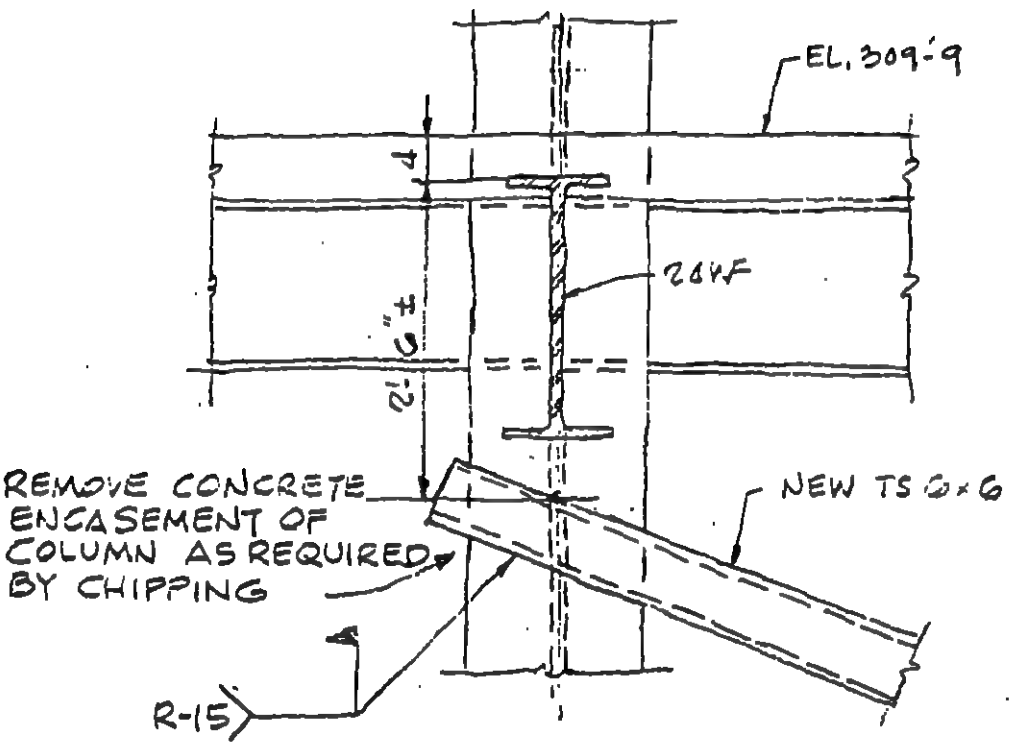

REV.	LERA LESLIE E. ROBERTSON ASSOCIATES CONSULTING STRUCTURAL ENGINEERS	P1C01118	DRAWING NO.
	WTC REPAIR	DRAFT SLS	R-14
	COLUMNS (K-37/7) & (K-41/7) BRACING DETAIL	DESIGN SLS	
		CHECK	3-6-93

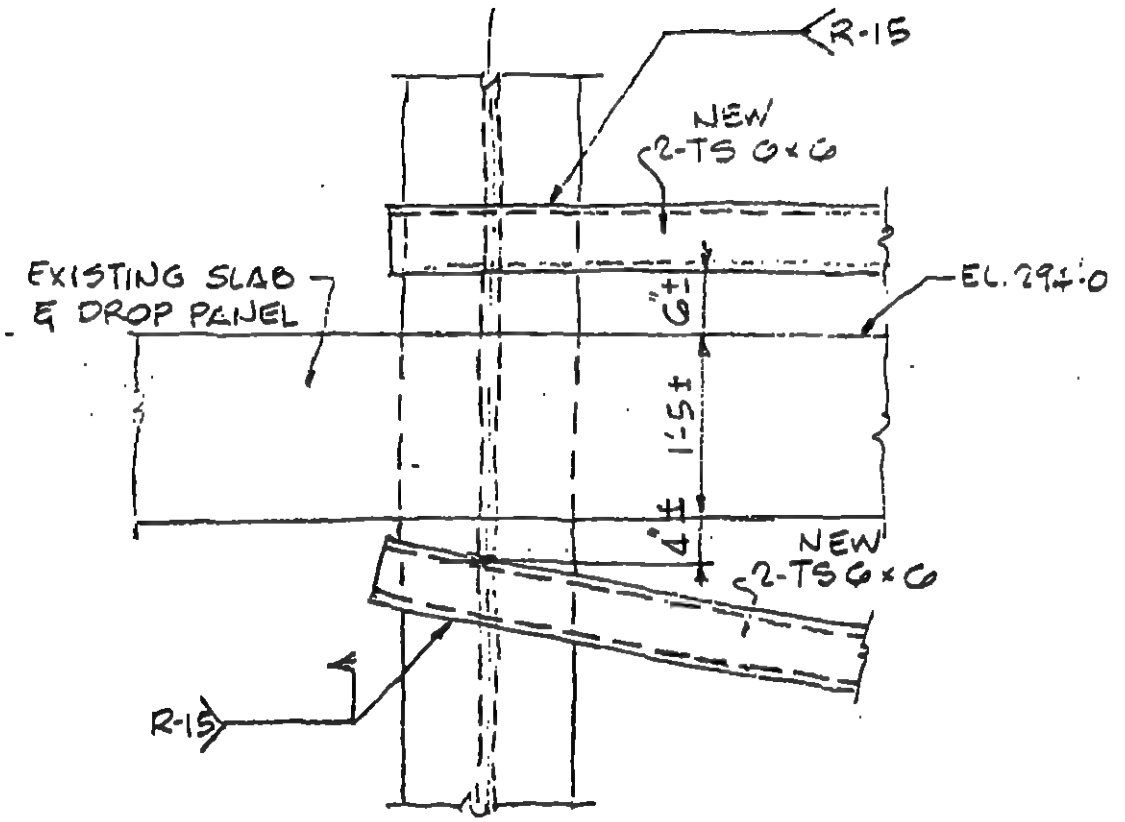

REV.	LERA LESLIE E. ROBERTSON ASSOCIATES CONSULTING STRUCTURAL ENGINEERS	P 1003118	DRAWING NO.
	WTC REPAIR	DRAFT SLS	R-15
	TYPICAL WELDS TS 6×6 BRACING TO COLUMNS	DESIGN SLS	
		CHECK	5 MAR 93

CONTRACTOR'S OPTION IS TO PROVIDE EITHER I, II OR III

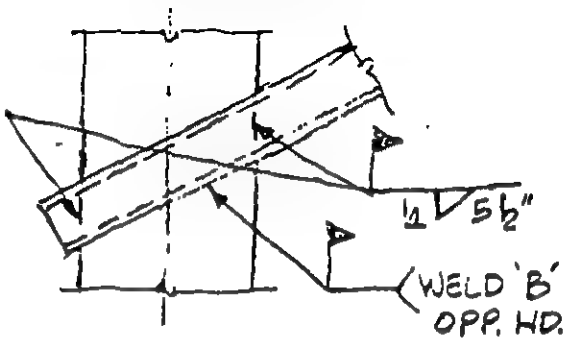

I

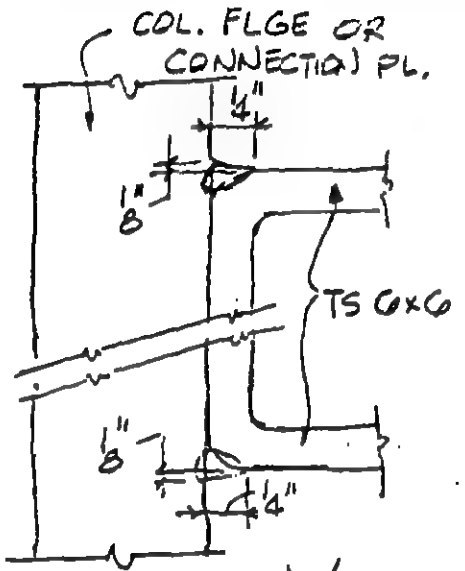

WELD 'A'

WELDS FULL WIDTH OF FLGE; EACH 14" LG. MIN.

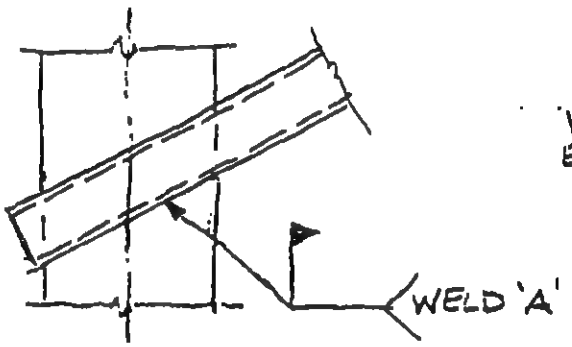

II

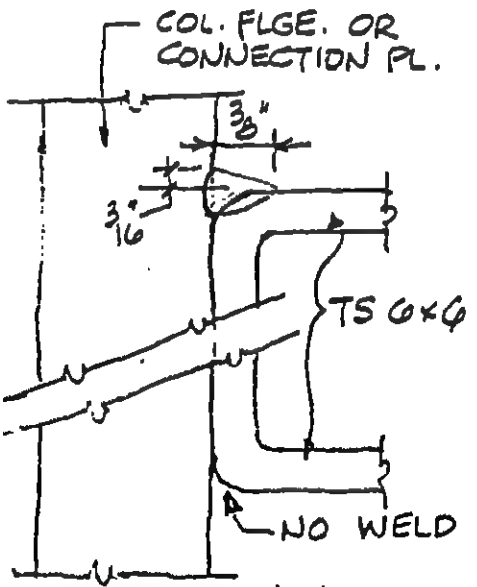

WELD 'B'

WELD FULL WIDTH OF FLGE, 14" LG. MIN.

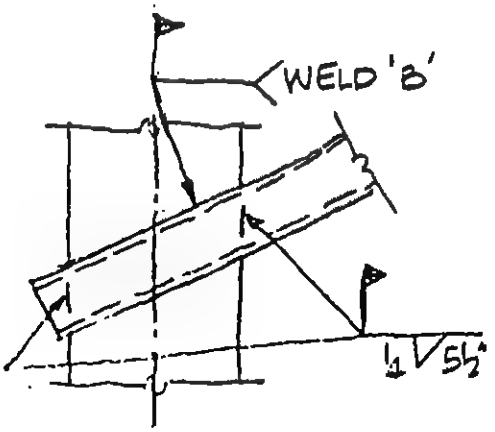

III

REV.	LERA LESLIE E. ROBERTSON ASSOCIATES CONSULTING STRUCTURAL ENGINEERS	P 1005118	DRAWING NO.
	WTC REPAIR	DRAFT SLS	R-15
	TYPICAL WELDS TS 6×6 BRACING TO COLUMNS	DESIGN SLS	
		CHECK	5 MAR 93

CONTRACTOR'S OPTION IS TO PROVIDE EITHER I, II OR III

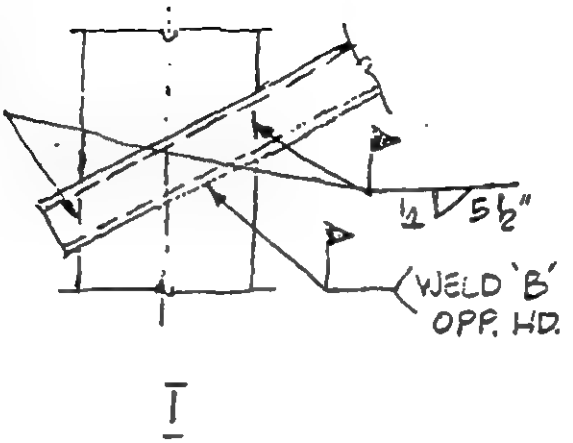

I

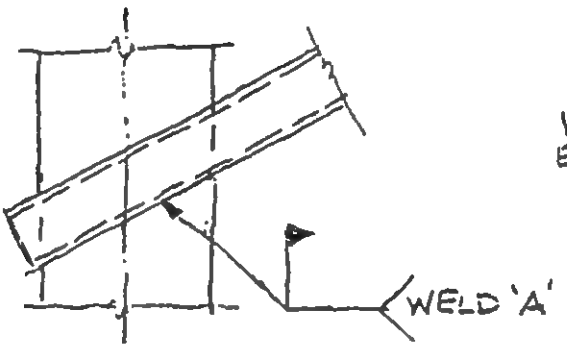

II

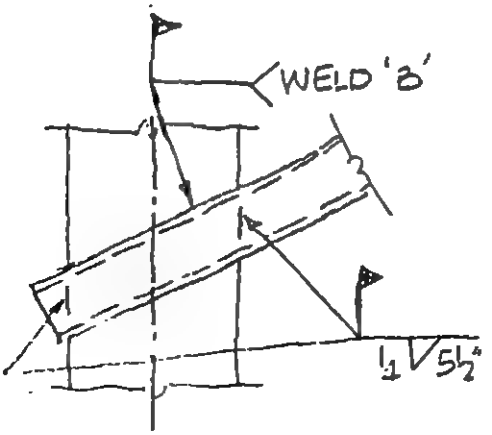

III

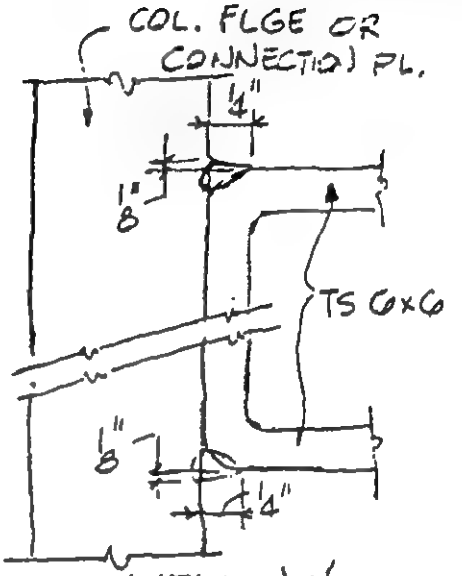

WELD 'A'

WELDS FULL WIDTH OF FLGE; EACH 11" LG. MIN.

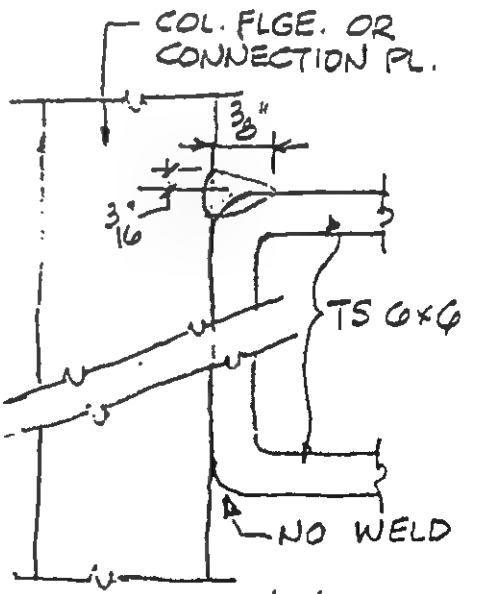

WELD 'B'

WELD FULL WIDTH OF FLGE, 14" LG. MIN.

REV.	LERA LESLIE E. ROBERTSON ASSOCIATES CONSULTING STRUCTURAL ENGINEERS	P 1003118	DRAWING NO.
	WTC REPAIR	DRAFT ESM	R16
	COLUMN (K31/11) BRACING DETAIL	DESIGN ESM	
		CHECK	5 MAR 93

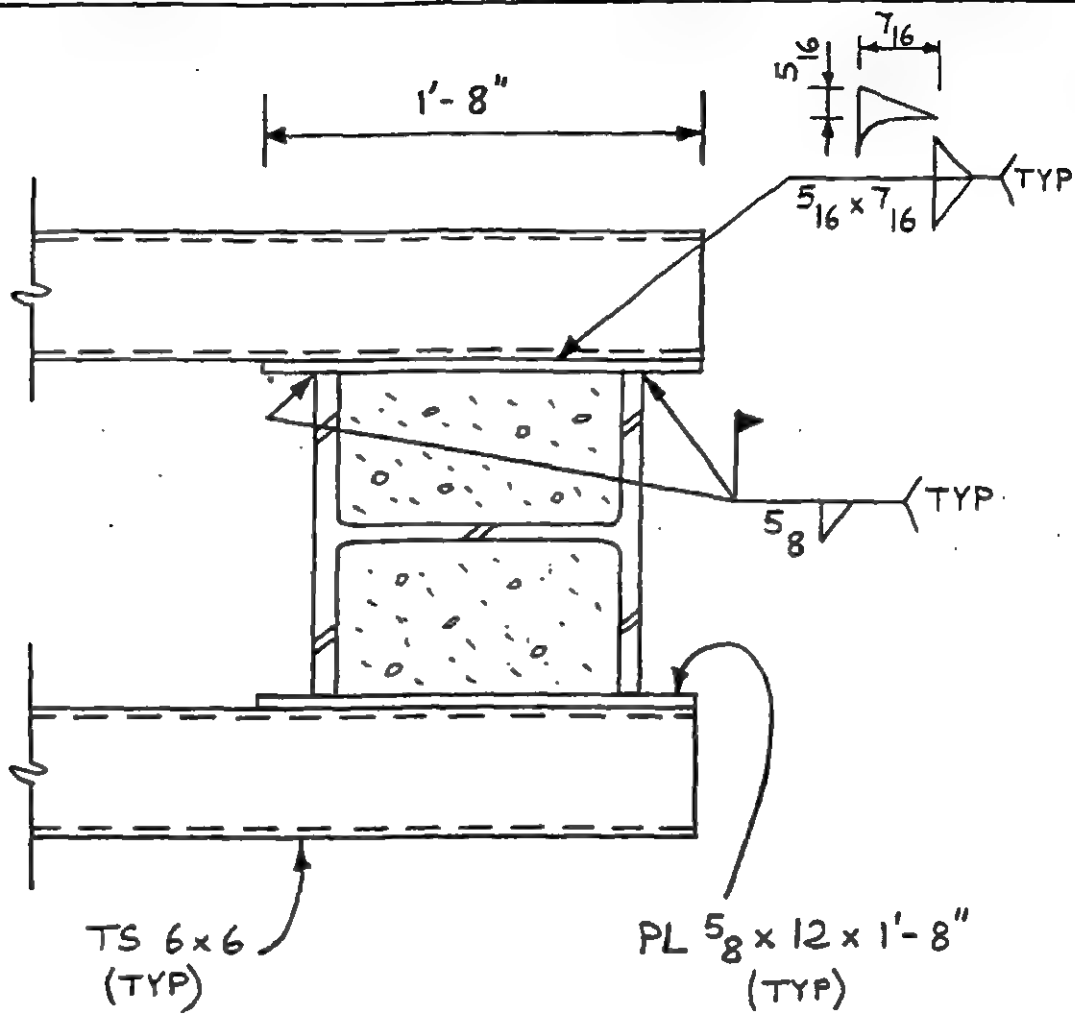

CONFIDENTIAL

EXP 003737

REV.	LERA LESLIE E. ROBERTSON ASSOCIATES CONSULTING STRUCTURAL ENGINEERS	P1023118	DRAWING NO.
	WTC REPAIR	DRAFT SLS	R-17
	COLUMNS K-31/7 & K-33/7 BRACING DETAIL	DESIGN KEH/SLS	
		CHECK	3-8-93

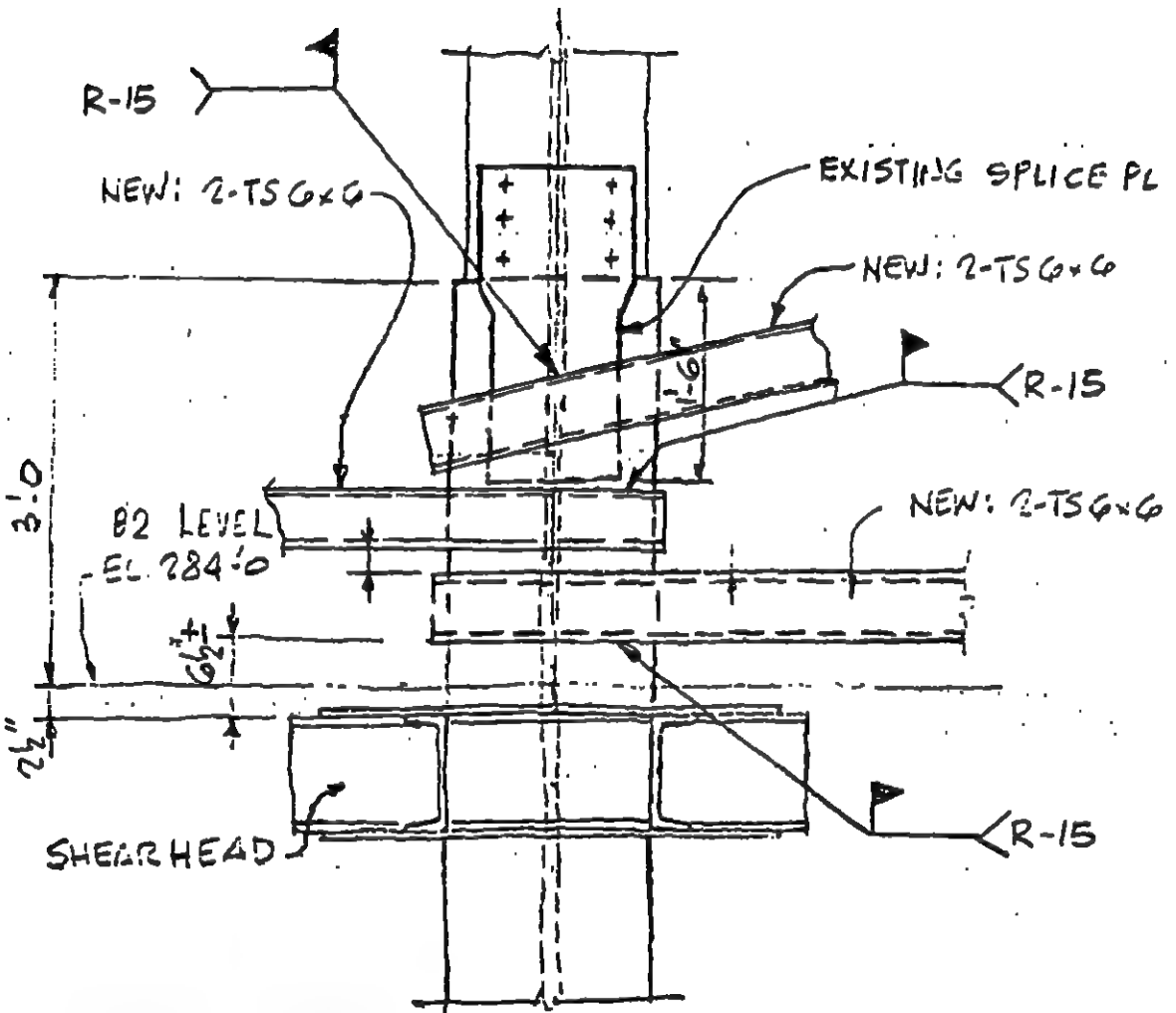

1. IF EXISTING SPLICE PLATE IS IN WAY OF WORK, PROVIDE WELDED REPLACEMENT FOR COLUMN SPLICE PER R-18.
2. REMOVE CONCRETE ENCASEMENT OF COLUMN AS REQUIRED, BY CHIPPING, TO PERMIT INSTALLATION OF TS 6x6's.
3. REMOVE SPLICE MATERIAL IN WAY OF NEW WORK, USING ARC AIR TOOL, EXERCISING DUE CARE TO AVOID DAMAGE TO COLUMN.

CONFIDENTIAL

REV.	LERA LESLIE E. ROBERTSON ASSOCIATES CONSULTING STRUCTURAL ENGINEERS	P 100	DRAWING NO.
	WTC - EXPLOSION	DRAFT	R-18
	COLUMN SPLICE REMOVAL & REPAIR	DESIGN WJP	
		CHECK	3-8-93

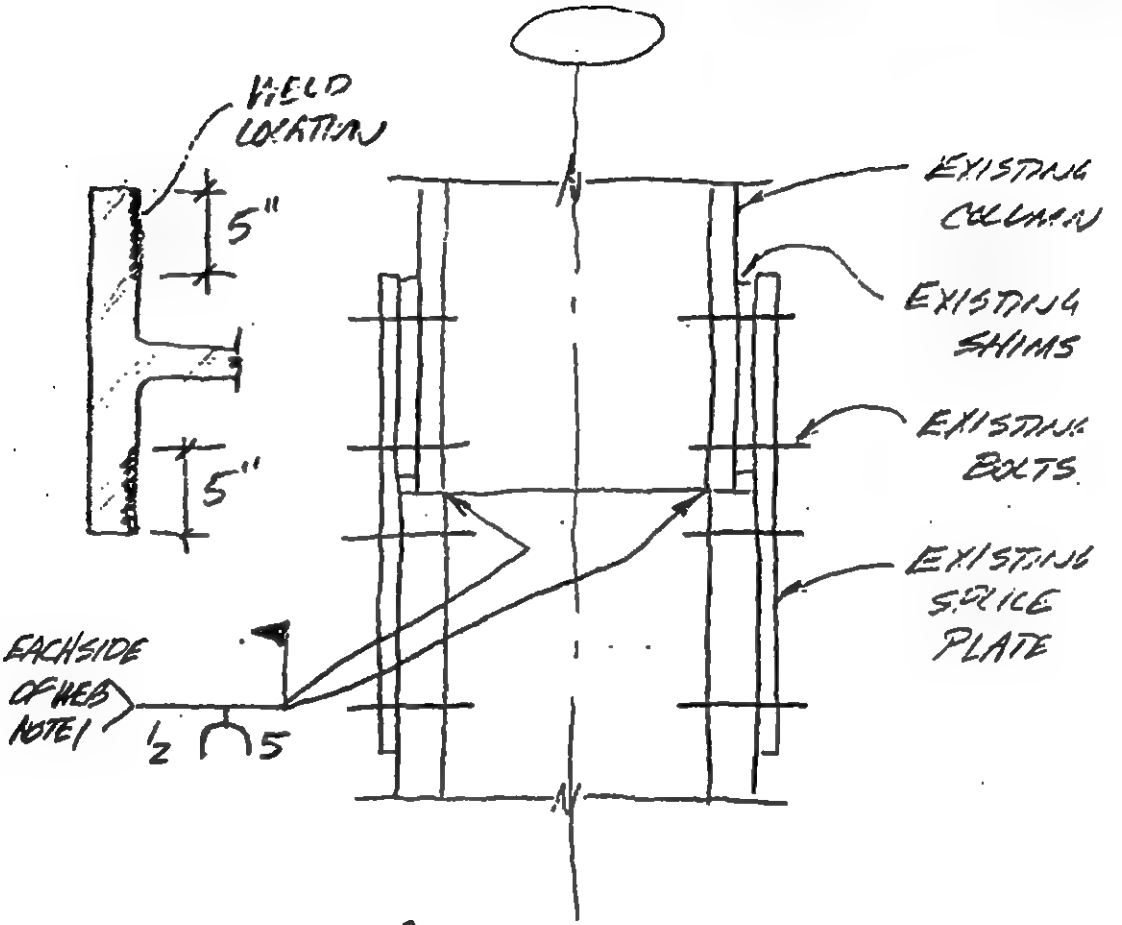

COLUMN SPLICE

NOTES

1. AIR-ARC GOUGE COLUMN FLANGE TO FLANGE JOINT PRIOR TO WELDING.
2. AFTER WELDING, EXISTING SPLICE PLATES CAN BE REMOVED.

CONFIDENTIAL

REV.	LERA LESLIE E. ROBERTSON ASSOCIATES CONSULTING STRUCTURAL ENGINEERS	P1003118	DRAWING NO.
	WTC - REPAIR	DRAFT ESM	R-20
	COLUMNS (301), (312) & (330) @ B2	DESIGN ESM	
	BRACING DETAILS	CHECK	13 MAR 93

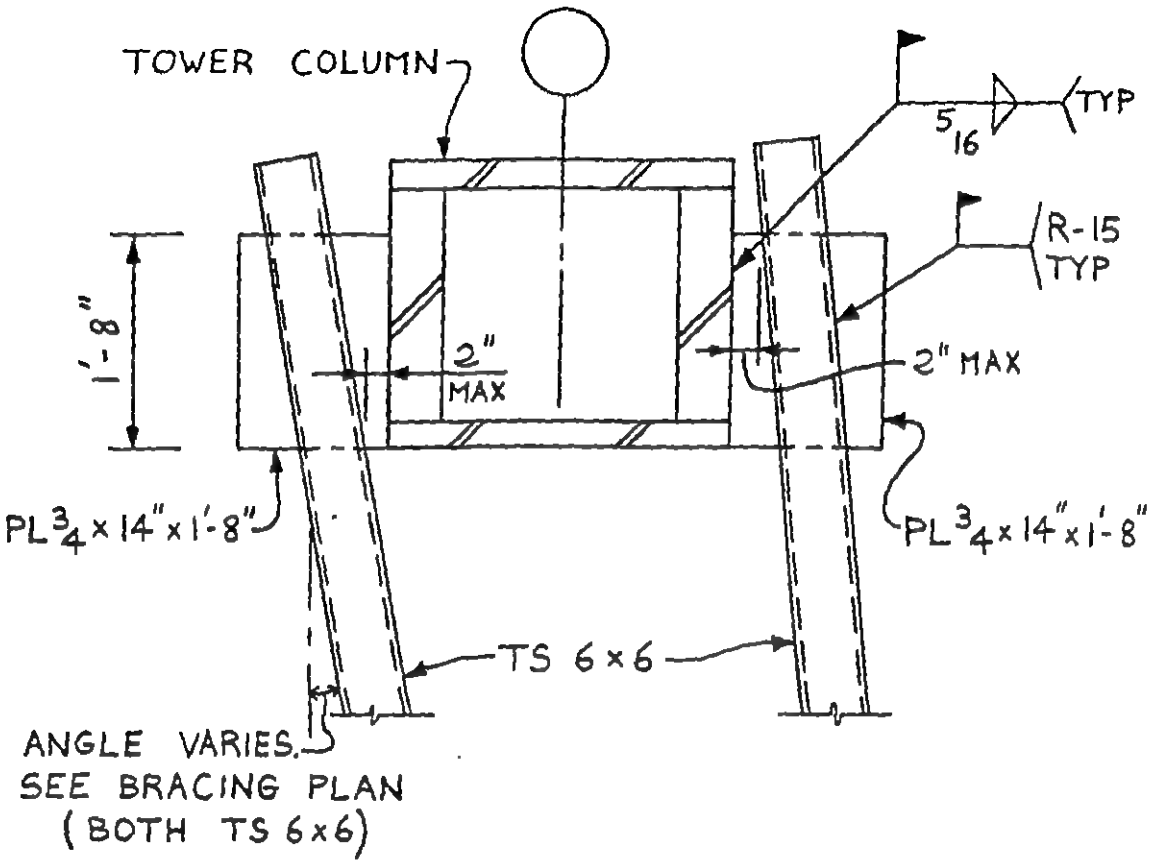

CONFIDENTIAL

EXP 003740

REV.	LERA LESLIE E. ROBERTSON ASSOCIATES CONSULTING STRUCTURAL ENGINEERS	P1003118	DRAWING NO.
	WTC - REPAIR	DRAFT ESM	R-21
	COLUMNS (K31/7) (K31/9) (K31/10) @ B2	DESIGN ESM	
	MAJOR AXIS BRACING DETAIL	CHECK	13 MAR 93

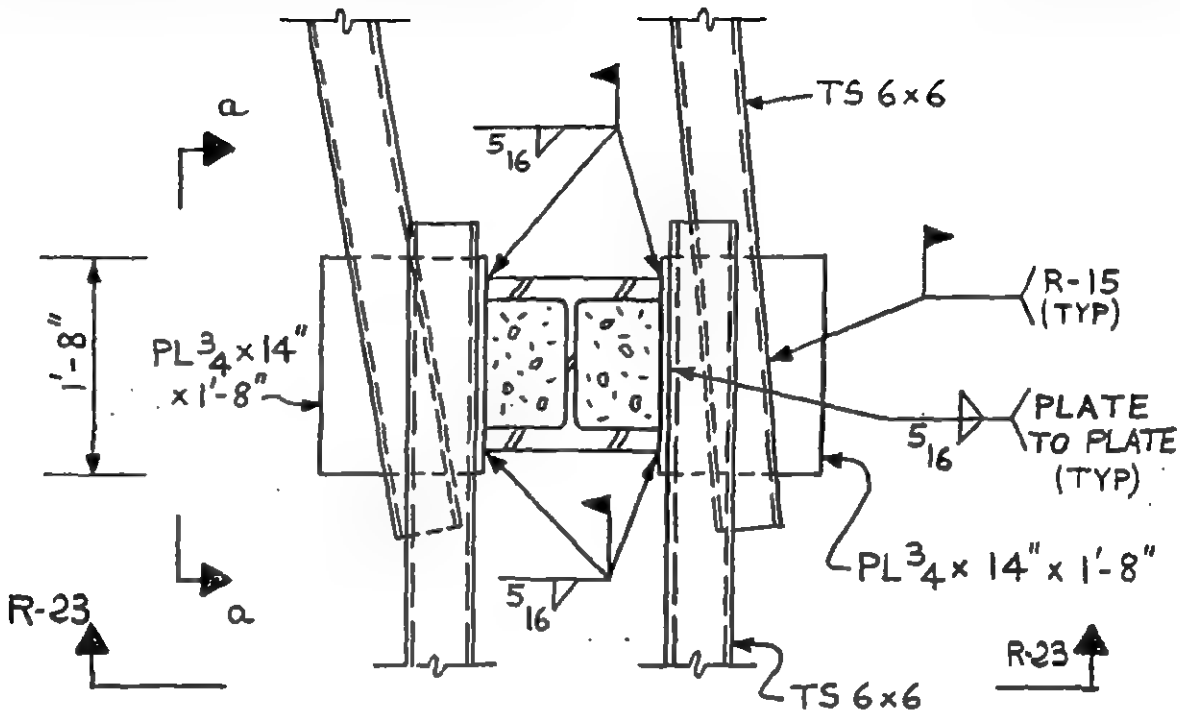

NOTE : EAST-WEST BRACING NOT SHOWN

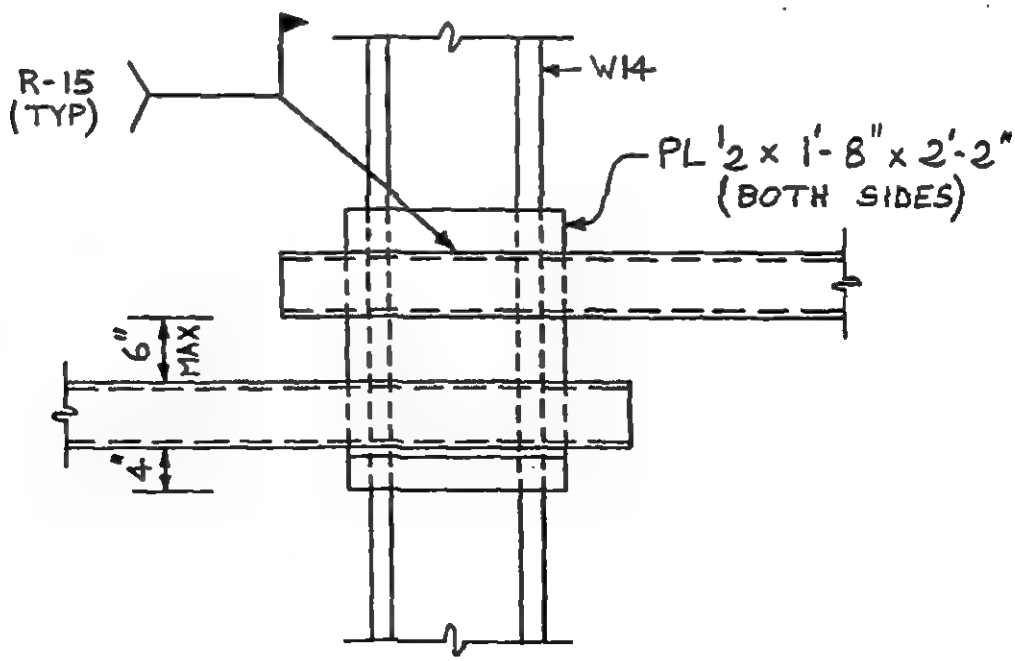

SECTION a-a

CONFIDENTIAL

EXP 003741

REV.	LERA LESLIE E. ROBERTSON ASSOCIATES CONSULTING STRUCTURAL ENGINEERS	P1003118	DRAWING NO.
	WTC - REPAIR	DRAFT ESM	R-22
	COLUMNS K35/7 K35/9 K35/10 @ B2	DESIGN ESM	
	MAJOR AXIS BRACING DETAIL	CHECK	13 MAR 93

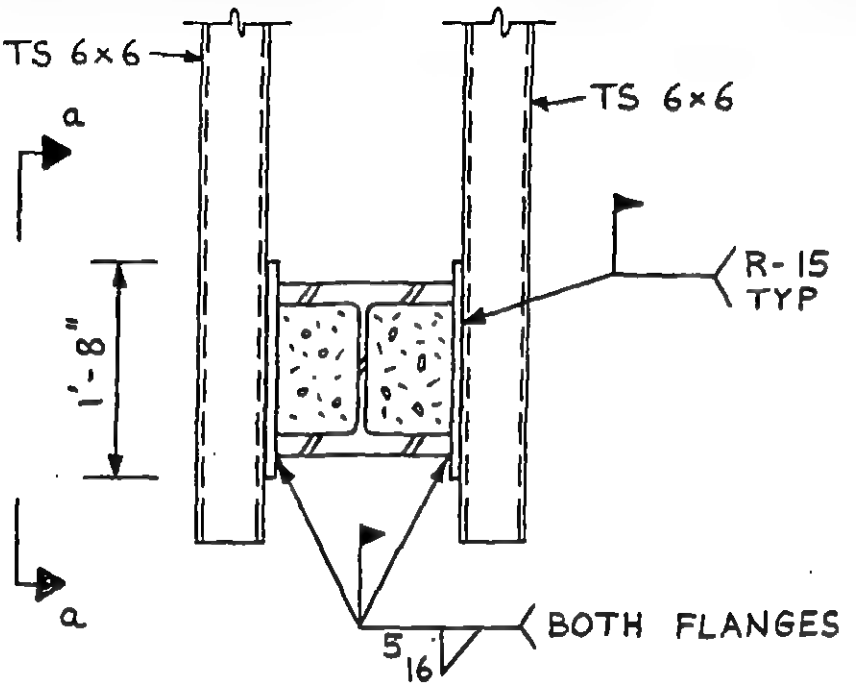

NOTE : EAST-WEST BRACING NOT SHOWN

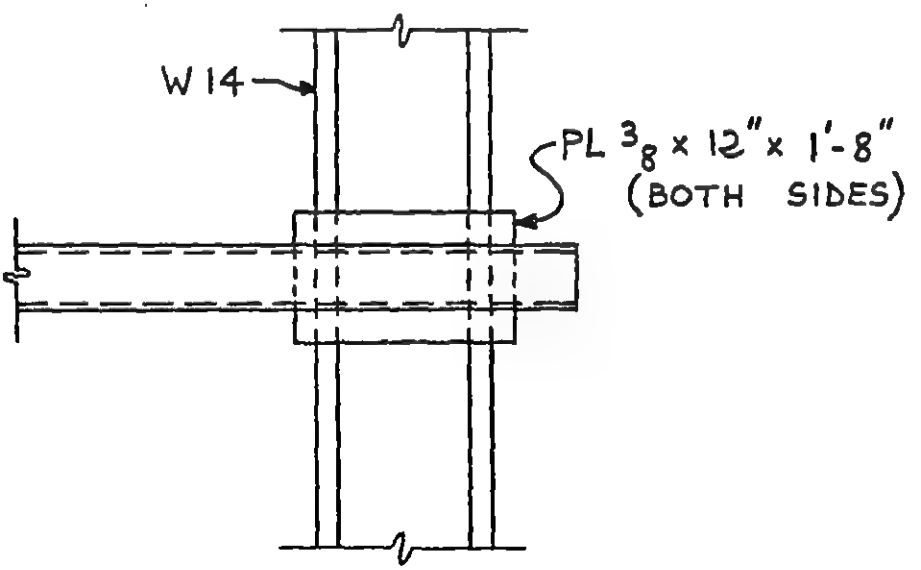

SECTION a-a

CONFIDENTIAL

EXP 003742

REV.	LERA LESLIE E. ROBERTSON ASSOCIATES CONSULTING STRUCTURAL ENGINEERS	P 100 3118	DRAWING NO.
	WTC - REPAIR	DRAFT ESM	R-23
	COLUMN (K31/7) - BRACING DETAIL @ B2	DESIGN ESM	
	COLUMNS (K31/9) AND (K31/10) SIMILAR	CHECK	13 MAR 93

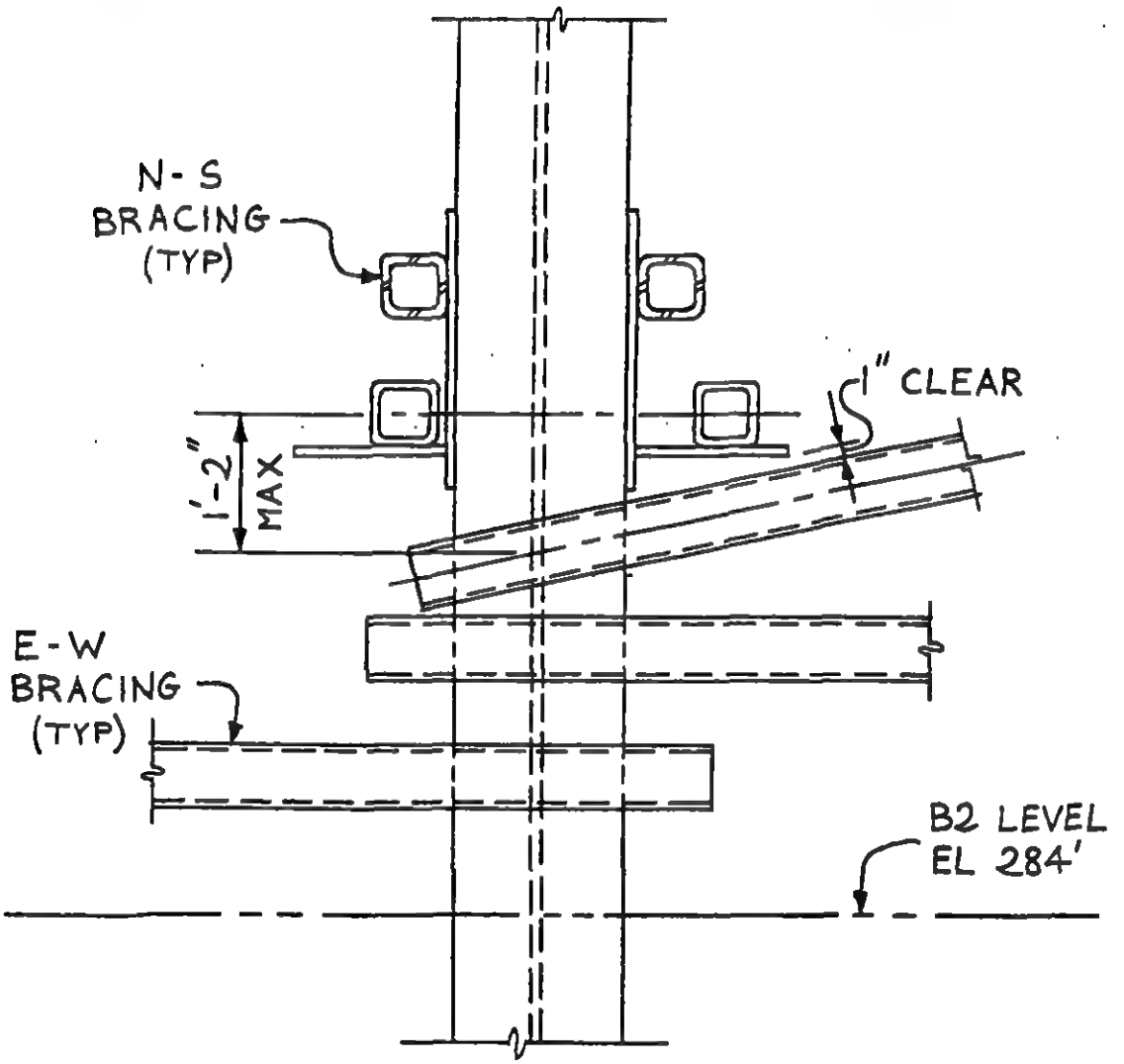

REV.	LERA LESLIE E. ROBERTSON ASSOCIATES CONSULTING STRUCTURAL ENGINEERS	P 1003118	DRAWING NO.
	WTC - EXPLOSION	DRAFT RTB	R-24.1
	R1 BRACING FOR DEMOLITION	DESIGN RTB	
		CHECK WJF	20 MAY 95

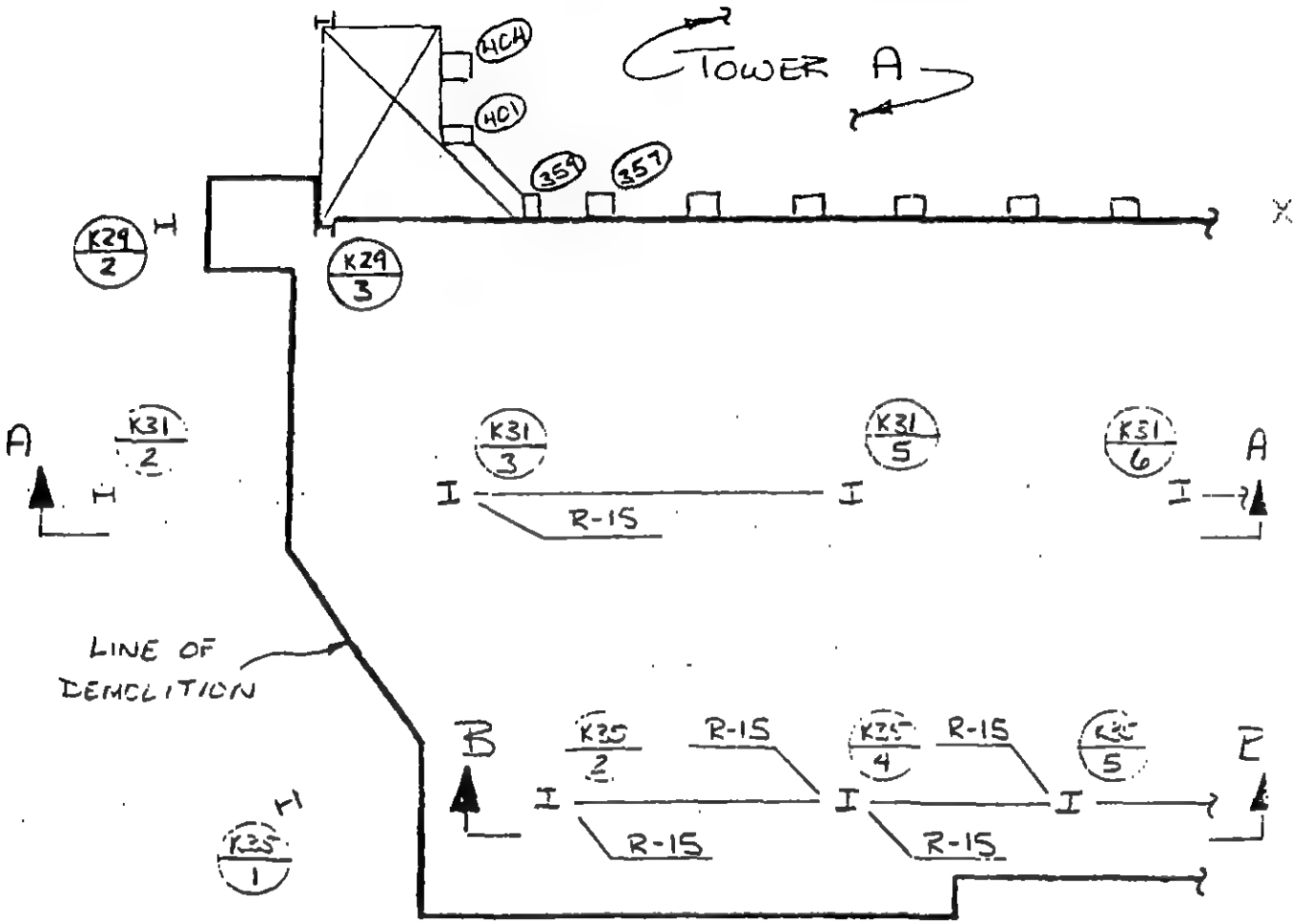

REV.	LERA LESLIE E. ROBERTSON ASSOCIATES CONSULTING STRUCTURAL ENGINEERS	P 100318	DRAWING NO.
	WTC-EXPLOSION	DRAFT RTB	R-24.2
	B1 BRACING FOR DEMOLITION	DESIGN RTB	
		CHECK WJF	20 MAY 93

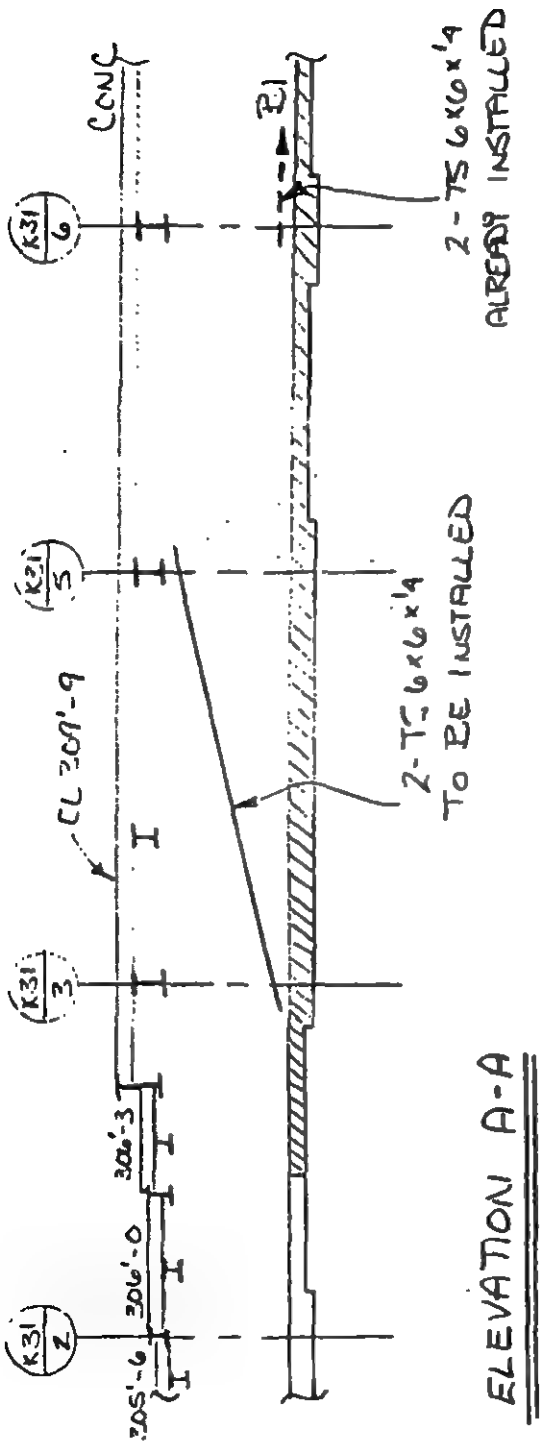

ELEVATION A-A

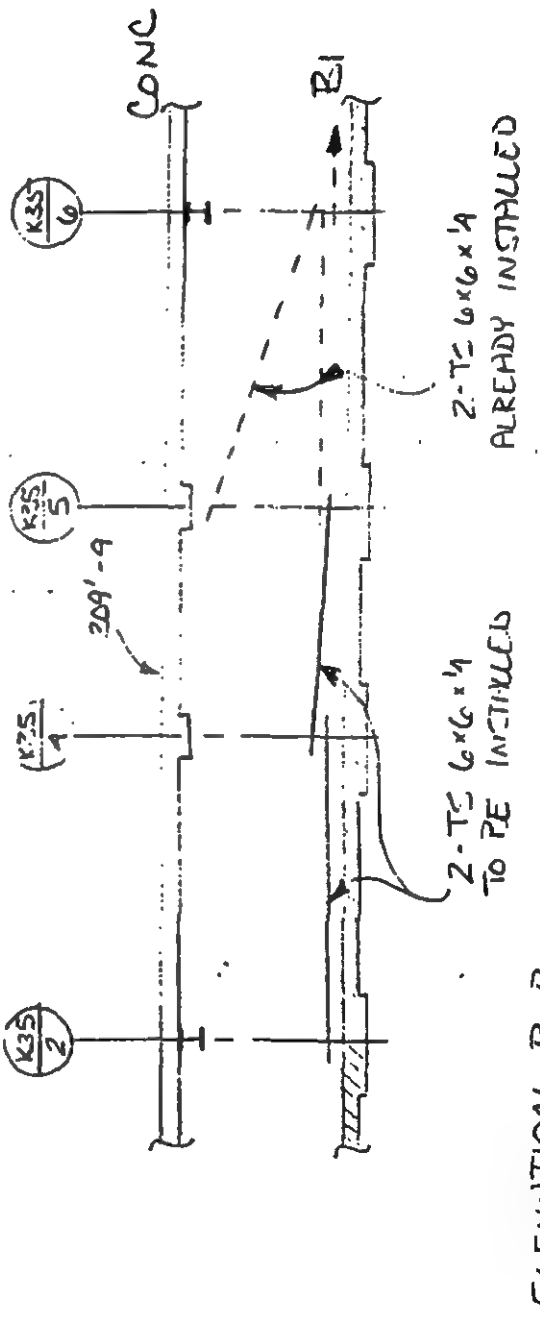

ELEVATION B-B

REV.	LERA LESLIE E. ROBERTSON ASSOCIATES CONSULTING STRUCTURAL ENGINEERS	P 1003119	DRAWING NO.
	WTC - STAIR DAMAGE ASSESSMENT	DRAFT H.G.	RE-ST-1.1
	LOCATION DIAGRAM FOR HANGER RODS @ STAIR K-1 BETWEEN EL. 294'-0 (B1) AND EL. 284'-0 (B2)	DESIGN	
		CHECK	28 JUNE 1993

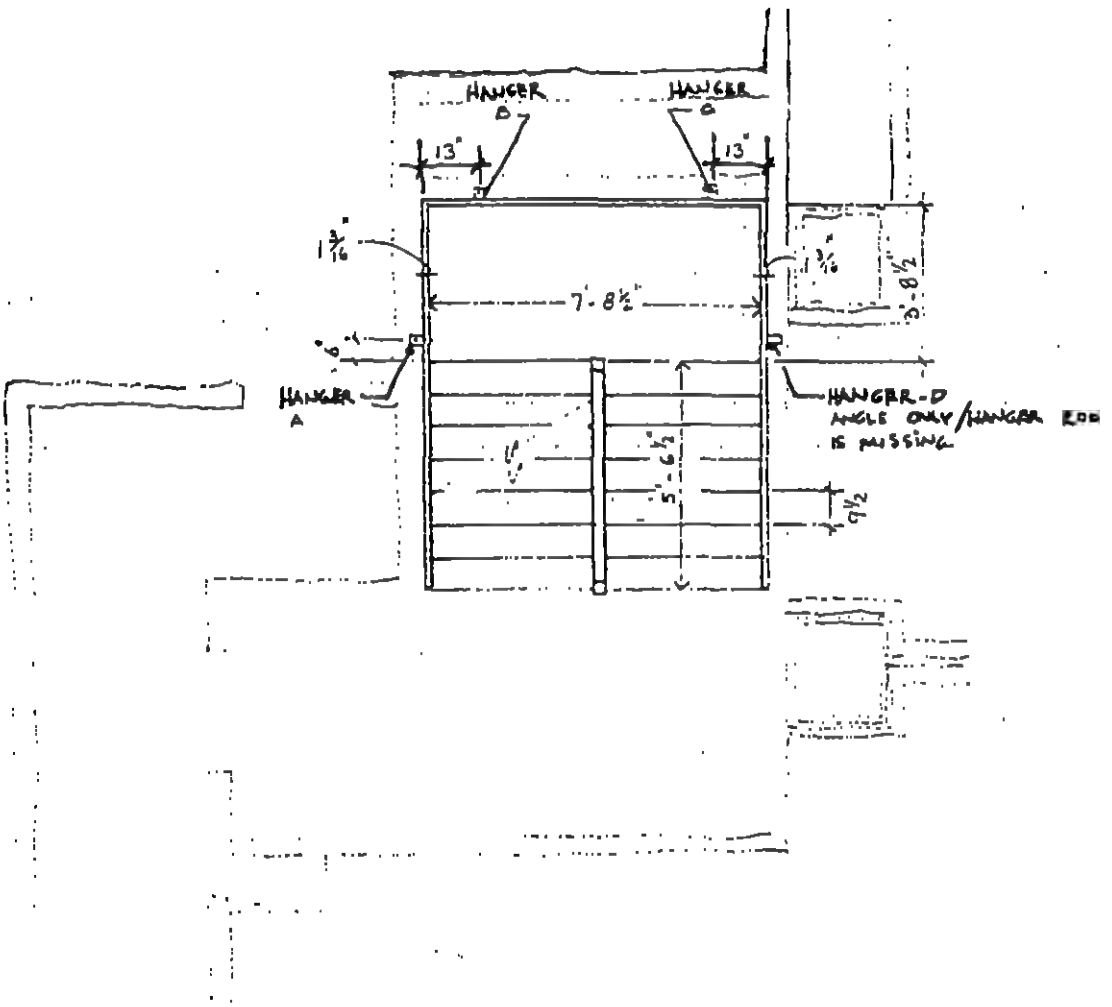

EL. - 284

B2

STAIR K-1

(1) LOCATION DIAGRAM FOR HANGER RODS @ STAIR K-1 BETWEEN EL. 294'-0 (B1) AND EL. 284'-0 (B2)

REV.	LERA LESLIE E. ROBERTSON ASSOCIATES CONSULTING STRUCTURAL ENGINEERS	P. 1003119	DRAWING NO.
	WTC - STAIR DAMAGE ASSESSMENT	DRAFT H.G.	RE - ST - 1.2
	RECONSTRUCTION SKETCH FOR HANGER RODS @ STAIR K-1 BETWEEN LEVELS B1/B2. (HANGER RODS B & C)	DESIGN	
		CHECK	28 JUNE 1993

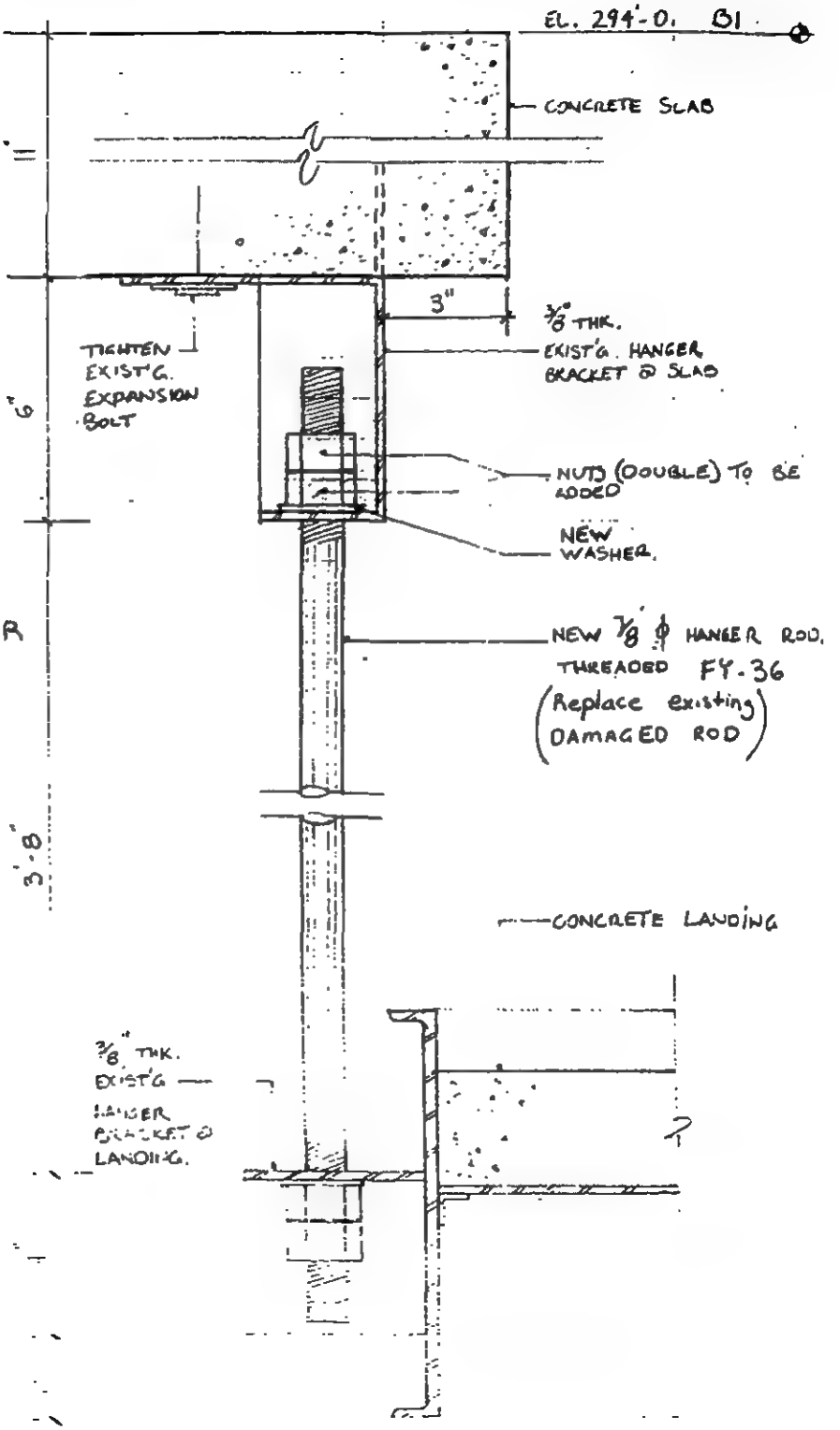

NOTE:
Shore STAIR PRIOR TO Removal of Exist'G ROD

(2) RECONSTRUCTION SKETCH FOR HANGER RODS B & C @ STR. K-1 BETWEEN EL. 294'-0 (B1) AND EL. 284'-0 (B2)

REV.	LERA LESLIE E. ROBERTSON ASSOCIATES CONSULTING STRUCTURAL ENGINEERS	P100-3	DRAWING NO.
	WTC - STAIR DAMAGE ASSESSMENT	DRAFT	RE-SK-13
	RECONSTRUCTION SKETCH FOR HANGER ROD @ STAIR K-1 (HANGER D)	DESIGN WT	
		CHECK	11-12-93

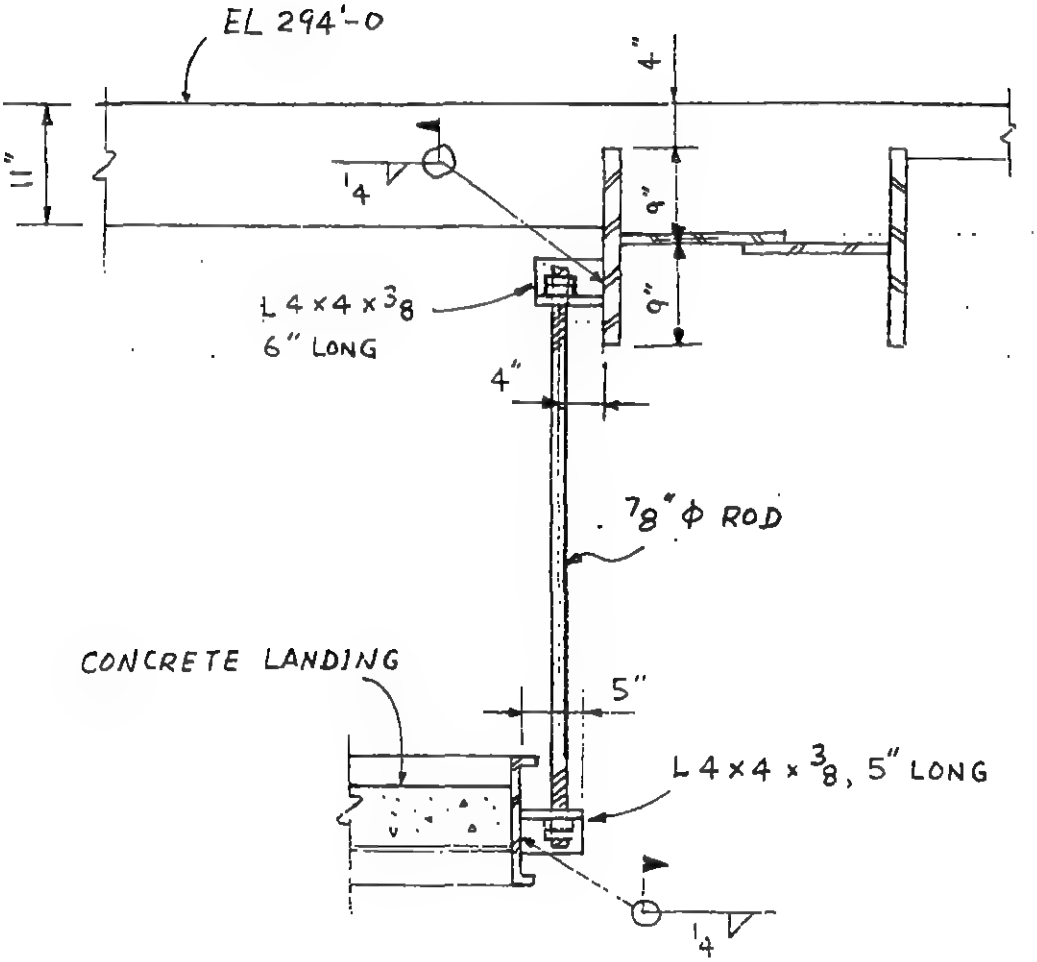

3 ELEVATION

HANGER D

REV.	LERA LESLIE E. ROBERTSON ASSOCIATES CONSULTING STRUCTURAL ENGINEERS	P 1003119	DRAWING NO.
	WTC - STAIR DAMAGE ASSESSMENT	DRAFT H.G.	RE-ST-2.1
	TYPICAL EXISTING CONDITION @ SLABS B2, B3, B4. PLAN AND SECTION.	DESIGN	
		CHECK	2 JULY 1993

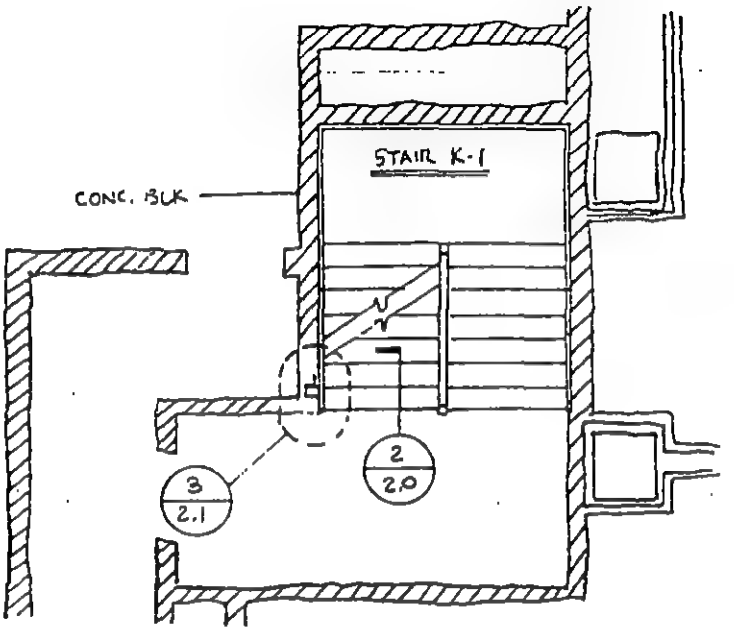

1/2.0 TYPICAL PLAN CONDITION @ STAIR K-1 (EXISTING)

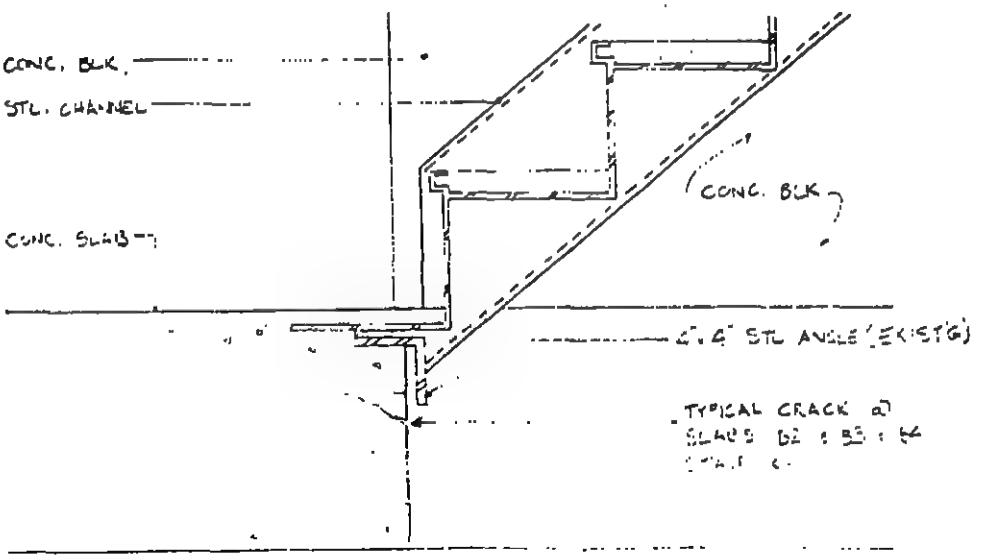

2/2.0 SECTION DETAIL

REV.	LERA LESLIE E. ROBERTSON ASSOCIATES CONSULTING STRUCTURAL ENGINEERS	P.1003119	DRAWING NO.
	WTC - STAIR DAMAGE ASSESSMENT	DRAFT H.G.	RE-ST-2.2
	SECTION AND PLAN DETAIL @ NEW SUPPORT FOR STAIR K-1 @ SLABS B2, B3, B4	DESIGN	
		CHECK	2 JULY 1993

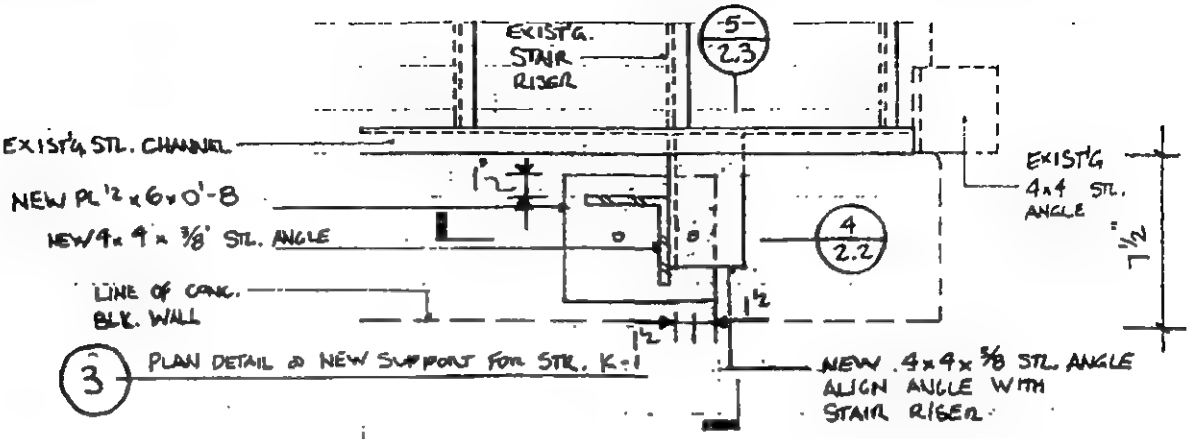

3 PLAN DETAIL @ NEW SUPPORT FOR STR. K-1

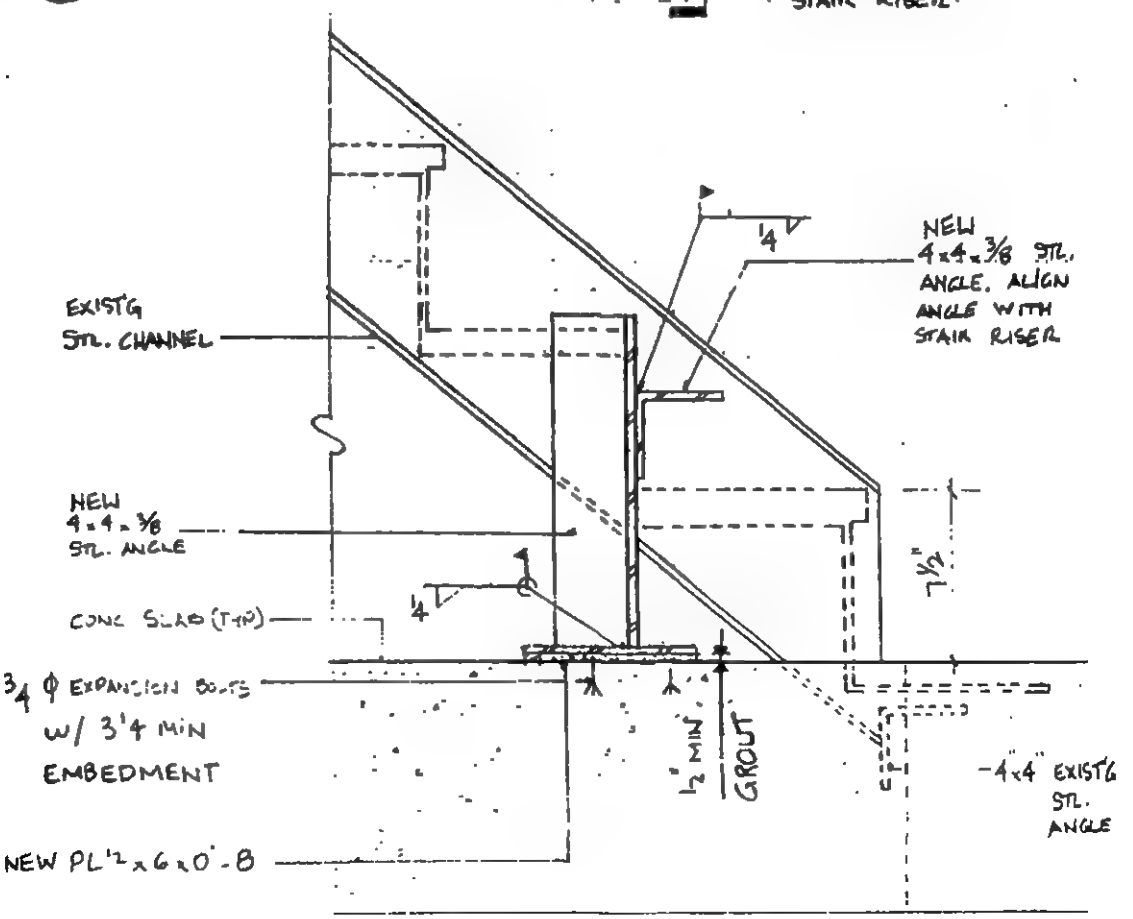

4

REV.	LERA LESLIE E. ROBERTSON ASSOCIATES CONSULTING STRUCTURAL ENGINEERS	P 1003119	DRAWING NO.
	WTC - STAIR DAMAGE ASSESSMENT	DRAFT H.G.	RE-ST-2.3
	SECTION DETAIL @ NEW SUPPORT FOR STR. K-1 @ SLABS B2, B3, AND B4	DESIGN	
		CHECK	2 JULY 1993

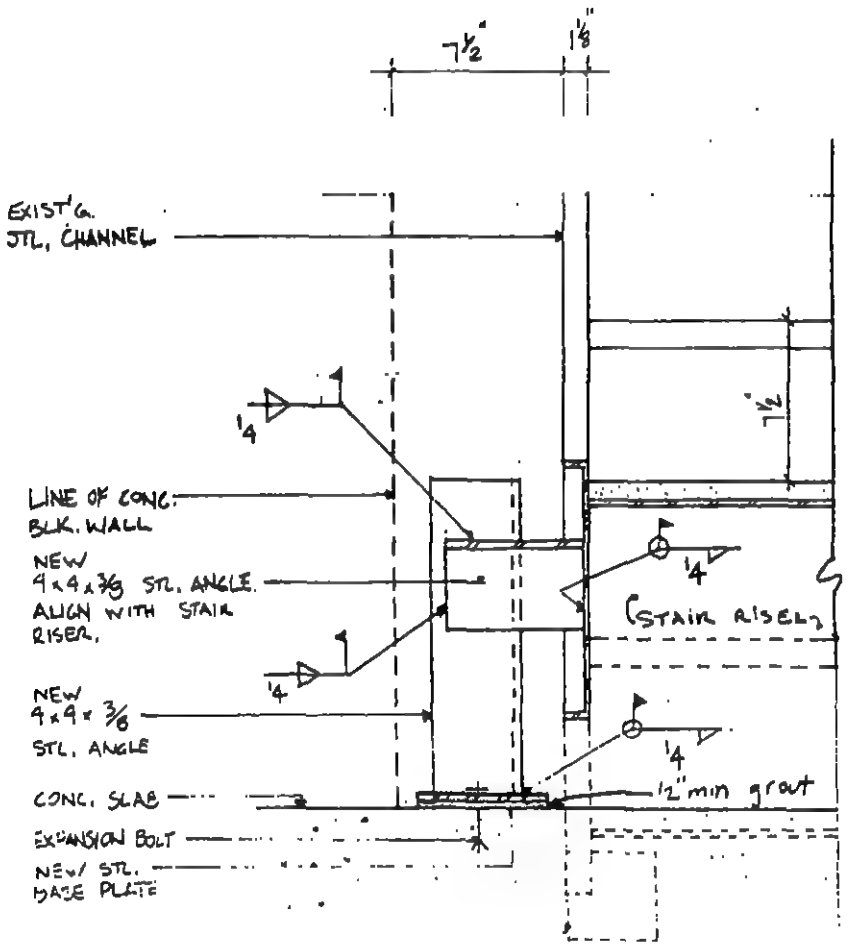

5 SECTION NEW SUPPORT FOR STR. K-1

CHAPTER 1 - GENERAL NOTES

RE-TISW-1-1 INDEX

RE-TISW-1-2 PAGE LISTING & CURRENT DATES

RE-TISW-1-3 GENERAL NOTES

CHAPTER 2 - DIAGONAL REPAIRS

RE-TISW-2-1 B1/B2 - 312/315

RE-TISW-2-2 B1/B2 - 321/324/327

RE-TISW-2-3 B2/B3 - 321/324

CHAPTER 3 - SPANDREL REPAIRS

RE-TISW-3-1 B2 SPANDREL - COLUMN 321 TO COLUMN 327

RE-TISW-3-2 B1 SPANDREL - COLUMN 324 TO COLUMN 327

CHAPTER 4 - CONNECTION REPAIRS

RE-TISW-4-1 COLUMN 321 @ B1

RE-TISW-4-2 COLUMN 324 @ B1

RE-TISW-4-3 COLUMN 327 @ B1

RE-TISW-4-4 COLUMN 321 @ B2

RE-TISW-4-5 COLUMN 324 @ B2

RE-TISW-4-6 COLUMN 327 @ B3

RE-TISW-4-7 COLUMN 327 @ B2

REV.	LERA LESLIE E. ROBERTSON ASSOCIATES CONSULTING STRUCTURAL ENGINEERS	P1003118	DRAWING NO
8/16	WTC - EXPLOSION	DRAFT	RE-T1SW
	RECONSTRUCTION - TOWER 1 SOUTH WALL PAGE LISTING & CURRENT DATES	DESIGN	1 - 2
		CHECK	16 JUL 93

	RE-T1SW-1-1	28 JUL 93
	RE-T1SW-1-2	27 JUL 93
	RE-T1SW-1-3	21 JUL 93
	RE-T1SW-2-1.1	16 JUL 93
	RE-T1SW-2-1.2	16 JUL 93
	RE-T1SW-2-1.3	16 JUL 93
	RE-T1SW-2-1.4	16 JUL 93
	RE-T1SW-2-1.5	16 JUL 93
	RE-T1SW-2-1.6	16 JUL 93
	RE-T1SW-2-1.7	16 JUL 93
	RE-T1SW-2-2.1	27 JUL 93
	RE-T1SW-2-2.2	21 JUL 93
	RE-T1SW-2-2.3	27 JUL 93
	RE-T1SW-2-2.4	27 JUL 93
	RE-T1SW-2-2.5	27 JUL 93
	RE-T1SW-2-2.6	27 JUL 93
	RE-T1SW-2-3	21 JUL 93
	RE-T1SW-3-1	21 JUL 93
	RE-T1SW-3-2	21 JUL 93
	RE-T1SW-4-1	28 JUL 93
*	RE-T1SW-4-2.1	16 AUG 93
*	RE-T1SW-4-2.2	16 AUG 93
	RE-T1SW-4-3.1	27 JUL 93
	RE-T1SW-4-3.2	21 JUL 93
	RE-T1SW-4-4.1	23 JUL 93
	RE-T1SW-4-4.2	23 JUL 93
	RE-T1SW-4-5.1	27 JUL 93
	RE-T1SW-4-5.2	27 JUL 93
	RE-T1SW-4-6	21 JUL 93
	RE-T1SW-4-7	23 JUL 93

REV.	LERA LESLIE E. ROBERTSON ASSOCIATES CONSULTING STRUCTURAL ENGINEERS	P1003118	DRAWING NO.
	WTC - EXPLOSION	DRAFT KEH	RE-T18W
	GENERAL NOTES	DESIGN KEH	1-3
		CHECK	21 JUL 93

1. FOR WELDING OPERATIONS, PROVIDE PREHEAT AND POSTHEAT AS FOLLOWS:

PLATE THICKNESS	TREATMENT
< 1-1/2"	PREHEAT ≥ 125°F INTERPASS ≥ 125°F
≥ 1-1/2"	PREHEAT ≥ 350°F INTERPASS ≥ 125°F PROVIDE IMMEDIATE POSTHEAT BETWEEN 350°F AND 600°F FOR MORE THAN 10 MINUTES
≥ 2"	PREHEAT ≥ 350°F INTERPASS ≥ 125°F PROVIDE IMMEDIATE POSTHEAT BETWEEN 350°F AND 600°F FOR MORE THAN 60 MINUTES

2. WHERE REMOVAL OF CRACKED WELDS IS SPECIFIED, AIR-ARC GOUGE TO BASE OF CRACK. DEPTH OF GOUGE NEED NOT EXCEED THE DEPTH OF THE END PREPARATION (IF ANY) PROVIDED FOR THE EXISTING WELD.

3. WELD LENGTHS FOLLOWED BY AN ASTERISK (*) ARE APPROXIMATE LENGTHS. AIR-ARC GOUGE THE LENGTH OF THE CRACK AND AT LEAST 4 TIMES THE GOUGE DEPTH BEYOND EACH END OF THE CRACK.

4. PROVIDE RUN-ON AND RUN-OFF TABS AS NEEDED WHEN GOUGE OR WELD EXTENDS TO THE END OF THE MEMBER. REMOVE RUN-ON AND RUN-OFF TABS AFTER WELDING IS COMPLETED.

CONFIDENTIAL

REV.	LERA LESLIE E. ROBERTSON ASSOCIATES CONSULTING STRUCTURAL ENGINEERS	P 1003118	DRAWING NO.
	WTC - EXPLOSION	DRAFT KEH	RE-TISW 2-1.1
	DIAGONAL REPAIR - B1/B2 - 312/315	DESIGN KEH	
		CHECK	16 JUL 93

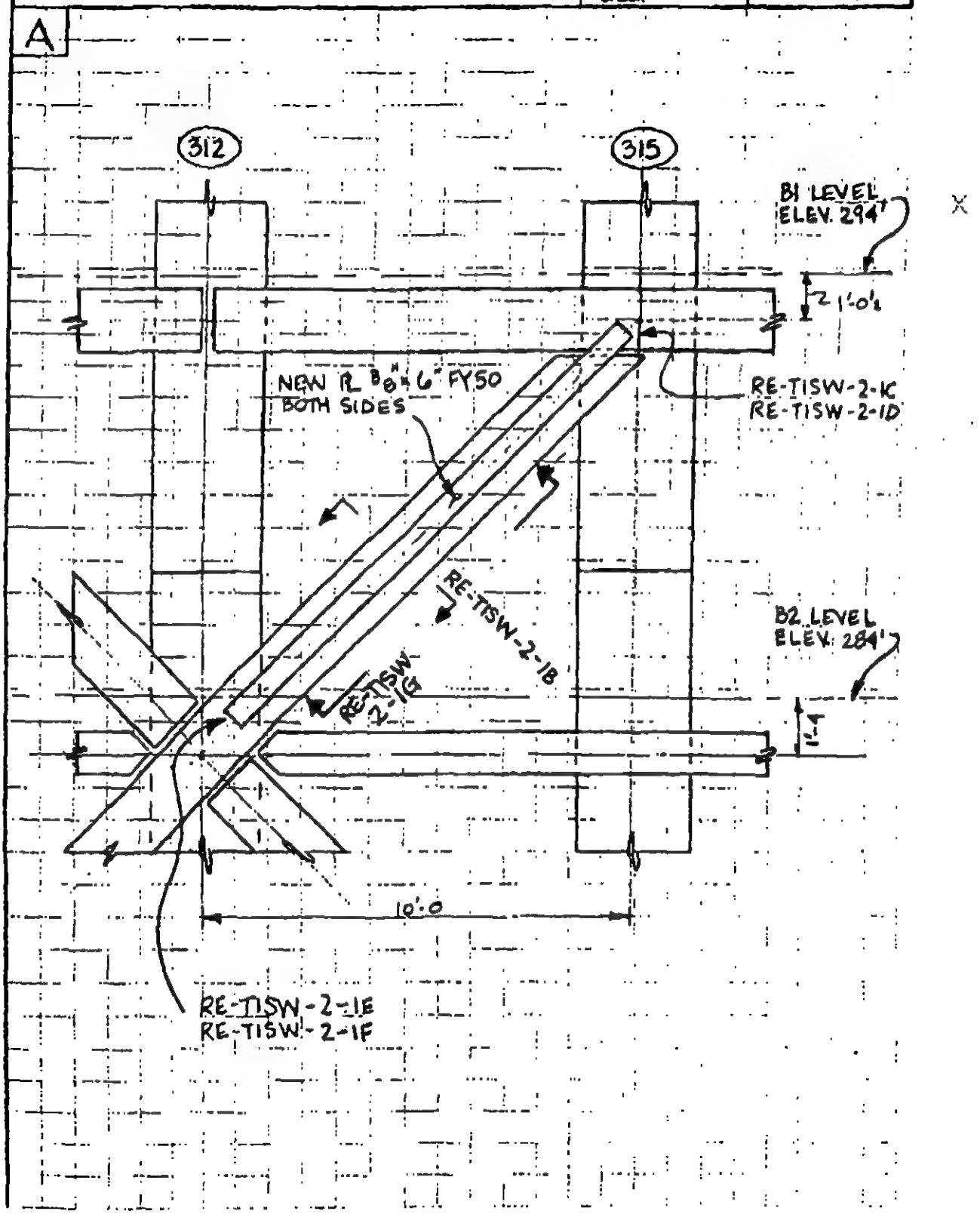

REV.	LERA LESLIE E. ROBERTSON ASSOCIATES CONSULTING STRUCTURAL ENGINEERS	P 1003118	DRAWING NO.
	WTC EXPLOSION	DRAFT KEH	RE-T.1SW
	DIAGONAL REPAIR - B1/B2 - 312/315	DESIGN KEH	2-1.2
		CHECK	16 JUL 93

B

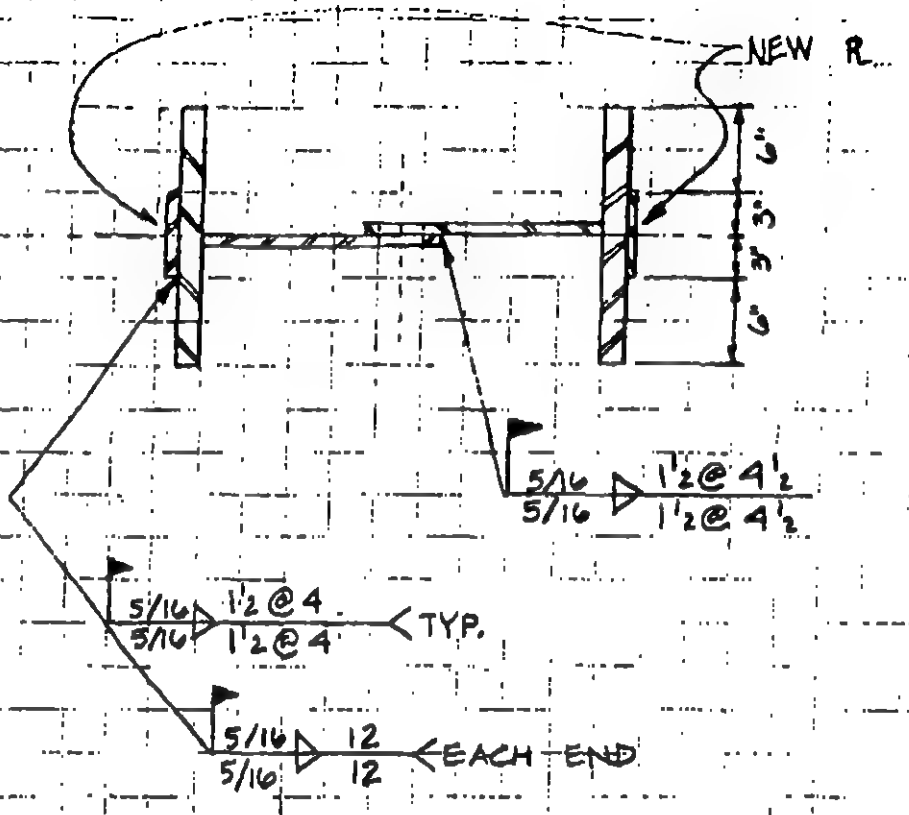

REV.	LERA LESLIE E. ROBERTSON ASSOCIATES CONSULTING STRUCTURAL ENGINEERS	P 1003118	DRAWING NO.
	WTC · EXPLOSION	DRAFT KEH	RE-TISW 2-1.4
	DIAGONAL REPAIR - B1/B2 - 312/315	DESIGN KEH	
		CHECK	16 JUL 93

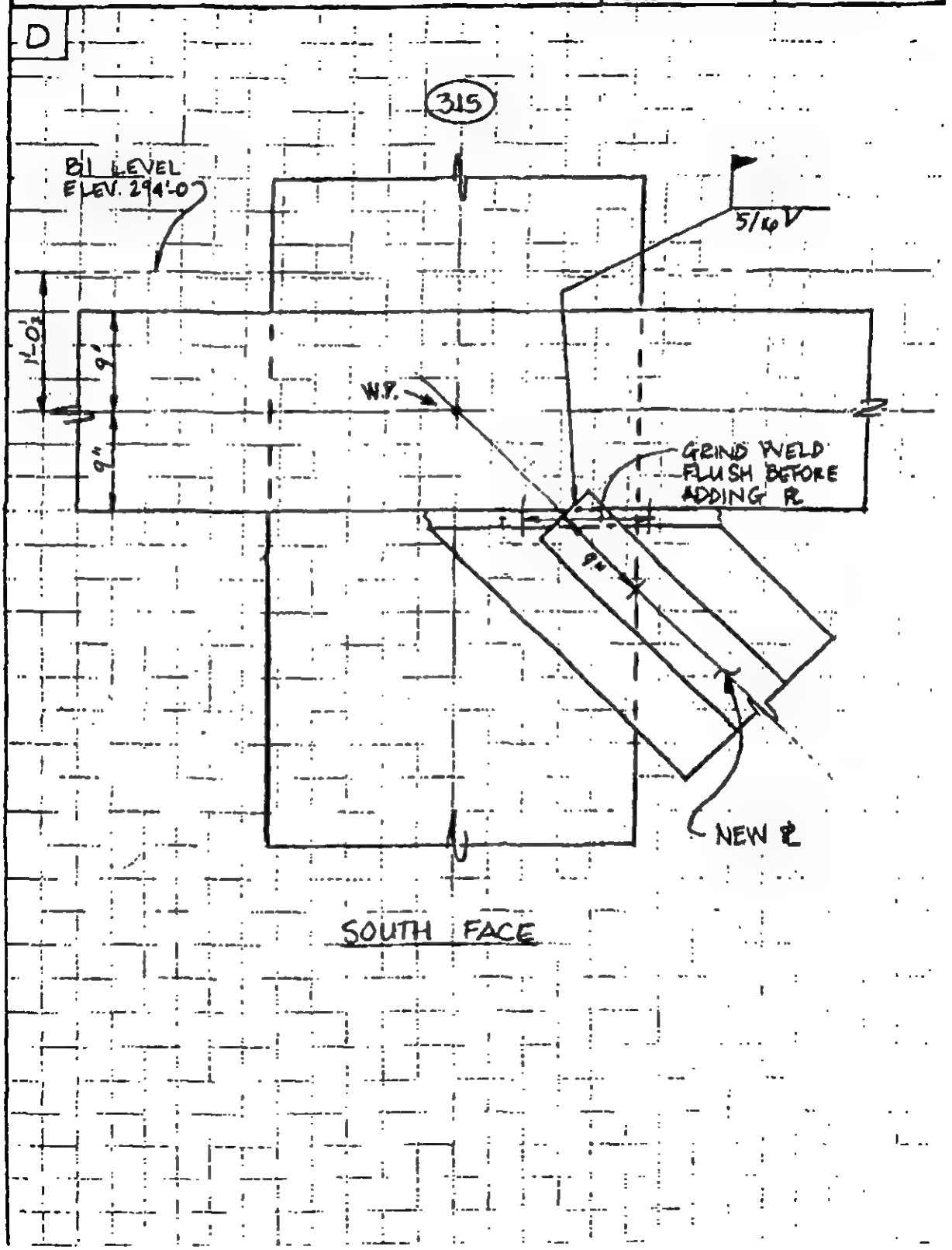

REV.	LERA LESLIE E. ROBERTSON ASSOCIATES CONSULTING STRUCTURAL ENGINEERS	P 1003118	DRAWING NO.
	WTC EXPLOSION	DRAFT KEH	RE-TISW 2-1.5
	DIAGONAL REPAIR - B1/B2-312/315	DESIGN KEH	
		CHECK	16 JUL 93

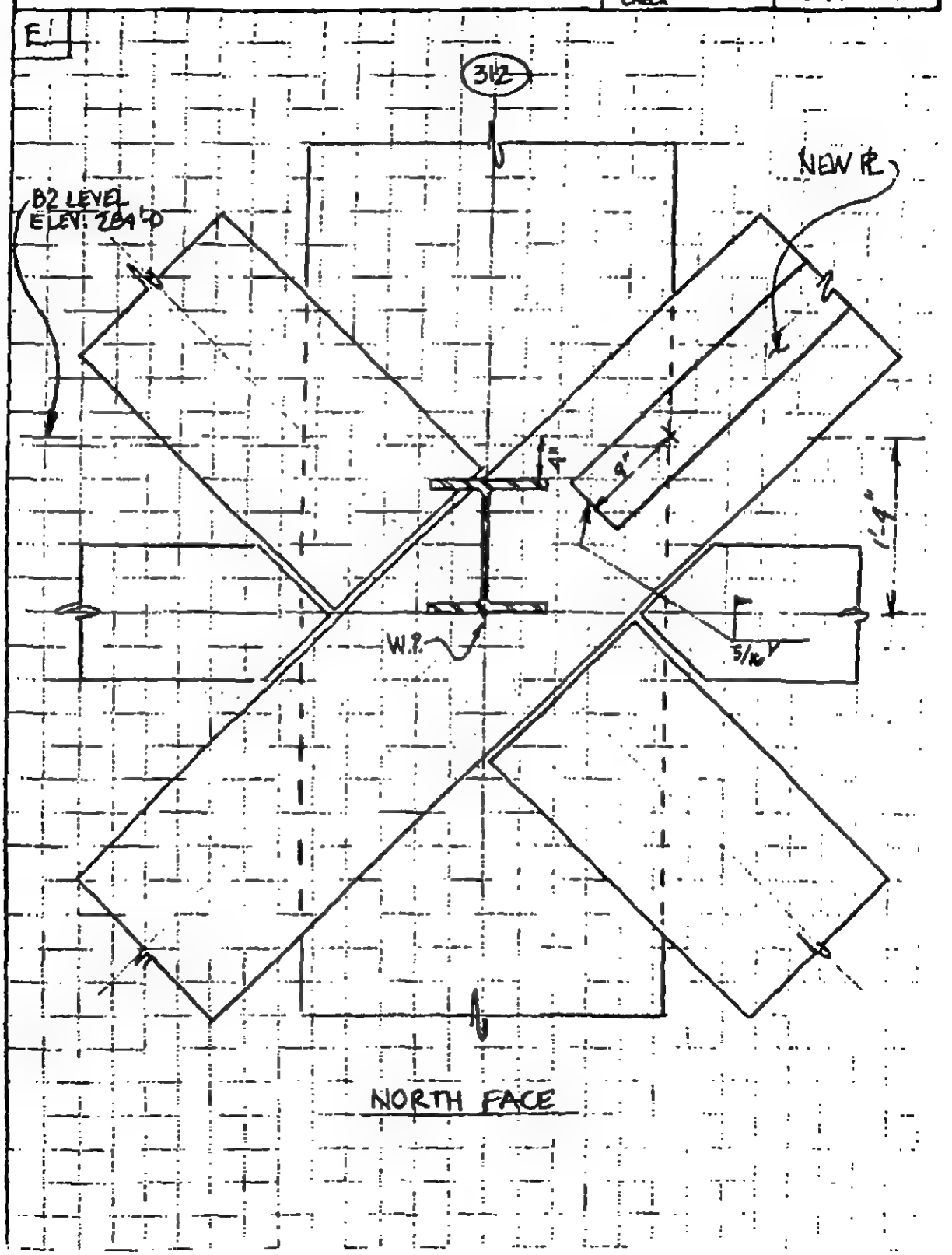

REV.	LERA LESLIE E. ROBERTSON ASSOCIATES CONSULTING STRUCTURAL ENGINEERS	P 1009118	DRAWING NO.
	WTC EXPLOSION	DRAFT KEH	RE-TISW 2-1.6
	DIAGONAL REPAIR - B1/B2 - 312/315	DESIGN KEH	
		CHECK	16 JUL 93

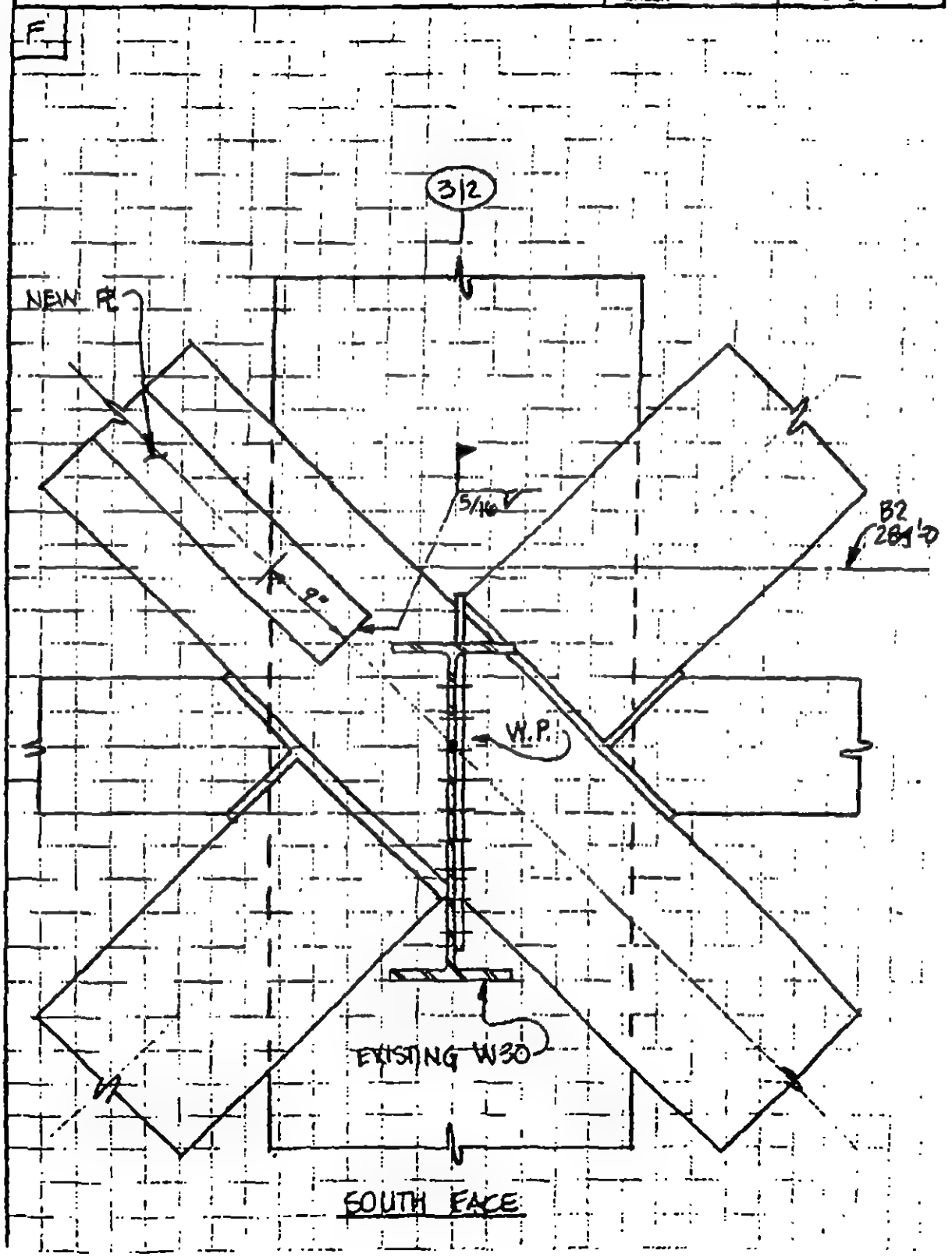

REV.	LERA LESLIE E. ROBERTSON ASSOCIATES CONSULTING STRUCTURAL ENGINEERS	P 1003118	DRAWING NO.
	WTC EXPLOSION	DRAFT KEH	RE-TISW
	DIAGONAL REPAIR B1/B2 - 312/315	DESIGN KEH	2-1.7
		CHECK	16 JUL 93

G

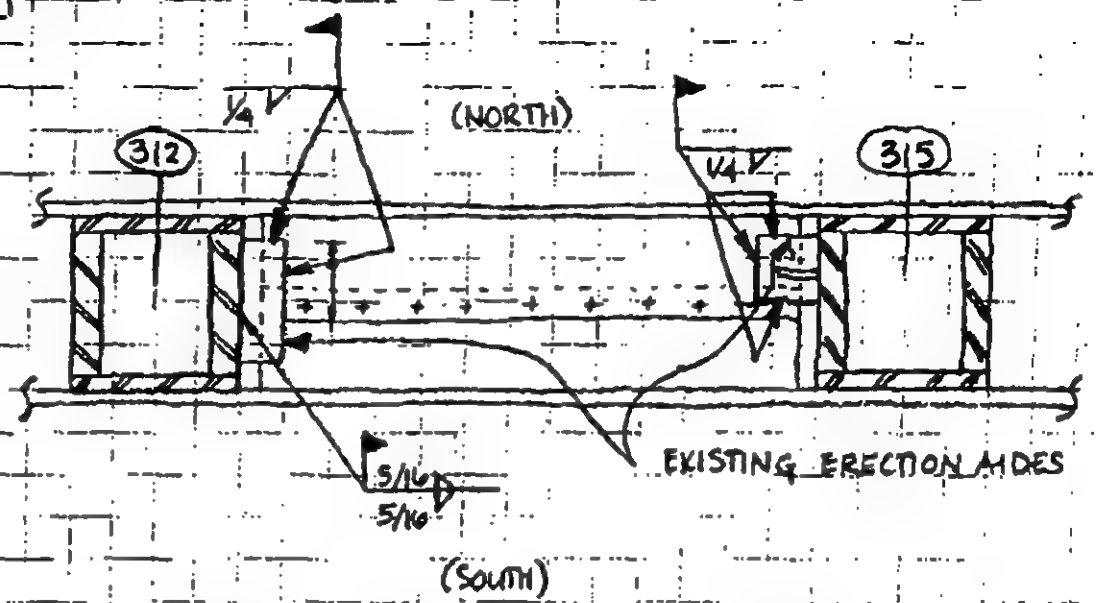

B1/B2 DIAGONAL - VIEW FROM BELOW

REV.	LERA LESLIE E. ROBERTSON ASSOCIATES CONSULTING STRUCTURAL ENGINEERS	P 1003118	DRAWING NO.
27JUL93	WTC-EXPLOSION	DRAFT	RE-TISW
25SEP93	DIAGONAL REPAIR	DESIGN WJP	2-2.1
	B1/B2 - 321/324/327	CHECK	16 JUL 93

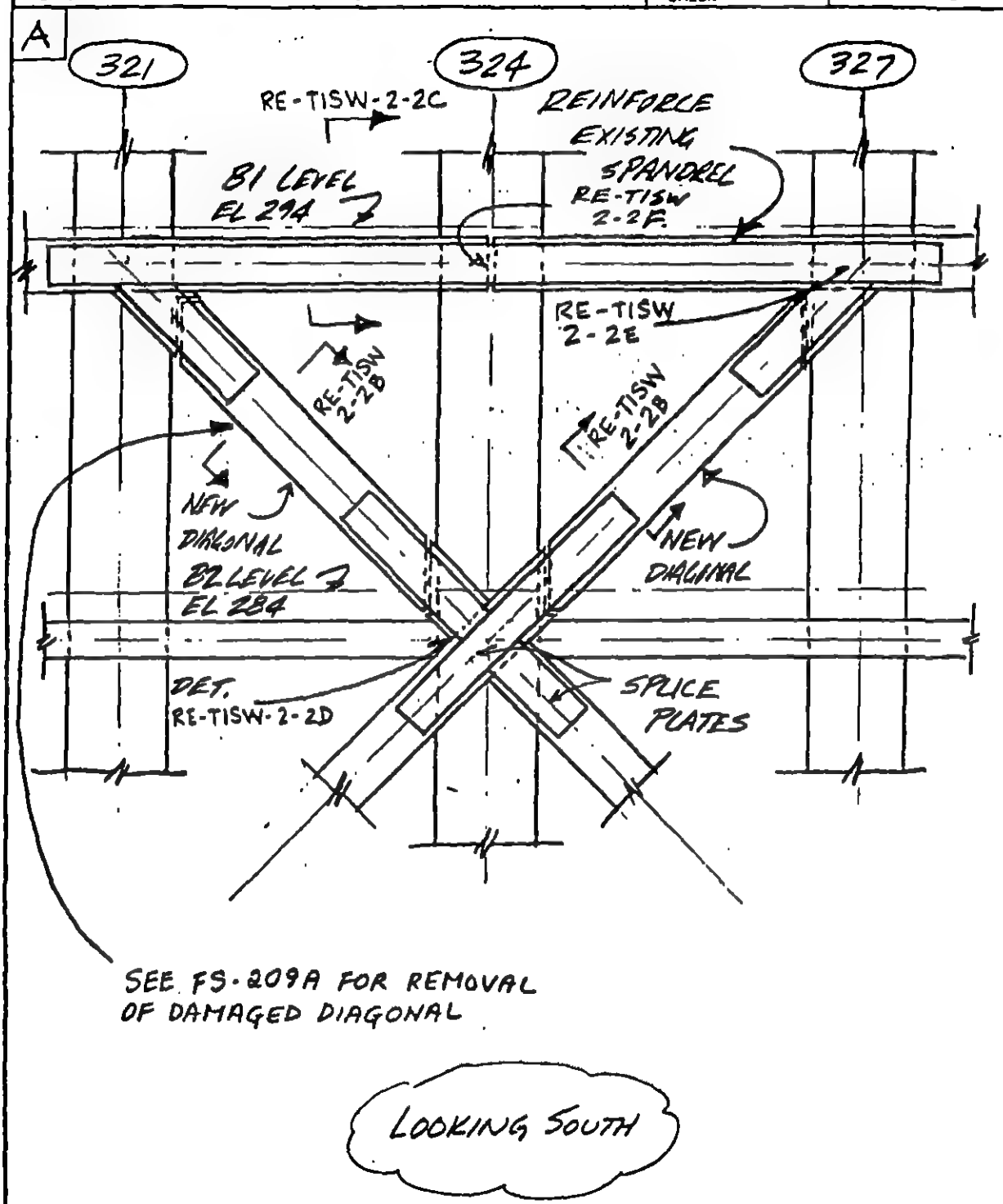

CONFIDENTIAL

EXP 003763

REV.	LERA LESLIE E. ROBERTSON ASSOCIATES CONSULTING STRUCTURAL ENGINEERS	P 1003118	DRAWING NO.
7/21/93	WTC - EXPLOSION	DRAFT	RE-TISW
	DIAGONAL REPAIR	DESIGN WJP	2-2.2
	B1/B2 - COLUMNS 321/324 & 324/327	CHECK	16 JUL 93

B

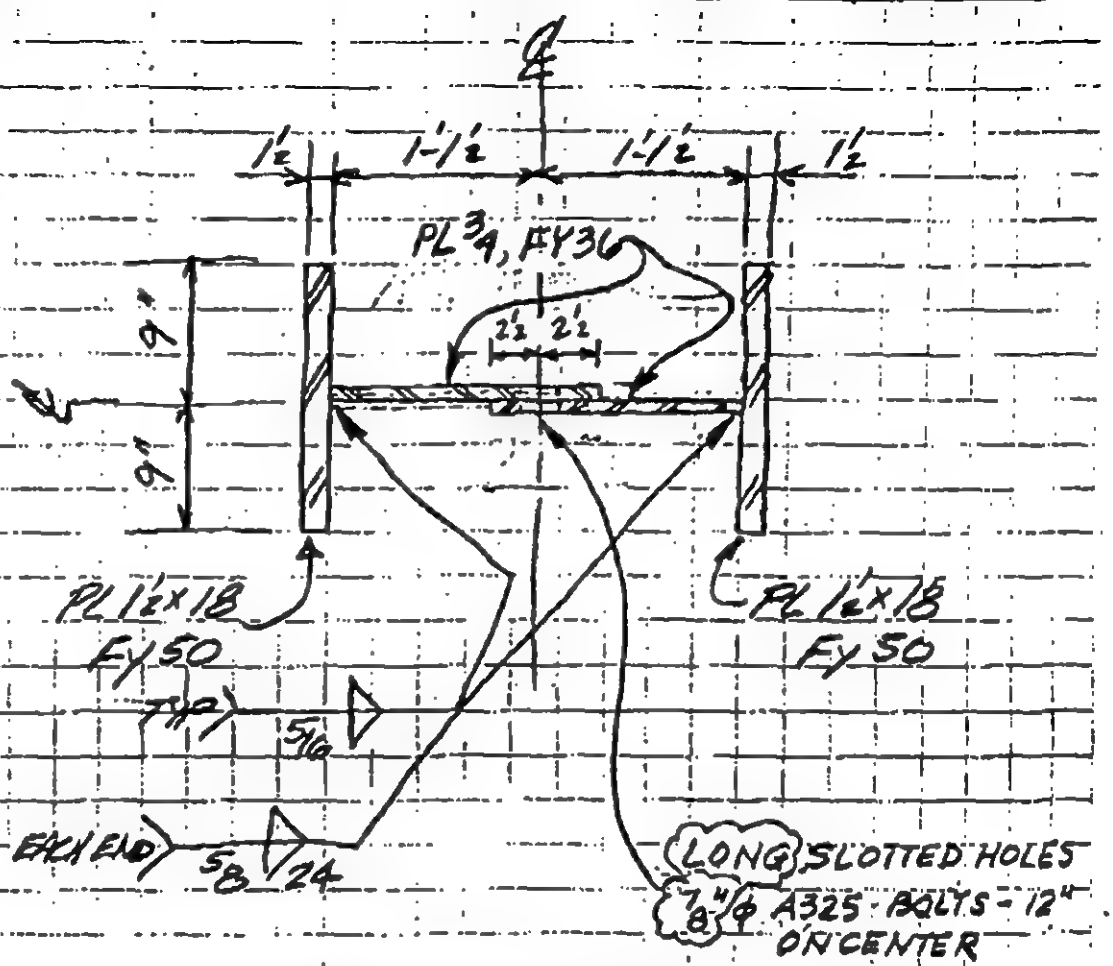

NEW DIAGONALS

REV.	LERA LESLIE E. ROBERTSON ASSOCIATES CONSULTING STRUCTURAL ENGINEERS	P 1003118	DRAWING NO.
27 JULY 93	WTC EXPLOSION	DRAFT	RE-T1SW
2 SEP 93	DIAGONAL REPAIR	DESIGN WJP	2-2.3
	B1/B2 - 321/324/327	CHECK	16 JUL 93

C

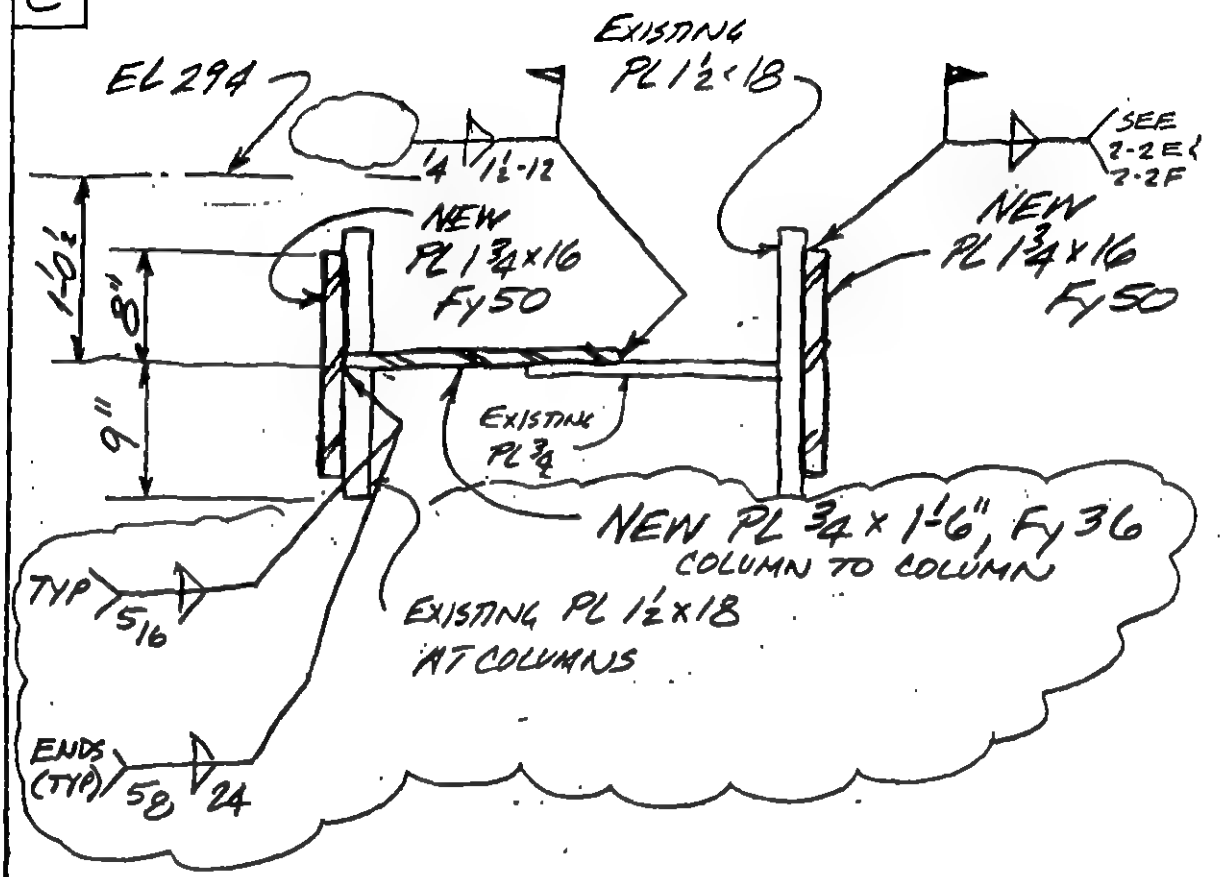

B1 SPANDREL

LOOKING WEST

CONFIDENTIAL

EXP 003765

REV.	LERA LESLIE E. ROBERTSON ASSOCIATES CONSULTING STRUCTURAL ENGINEERS	P 1003118	DRAWING NO.
27 JUL 93	WTC EXPLOSION	DRAFT	RE-T1SW
10 SEP 93	DIAGONAL REPAIR	DESIGN WJP	2-2.4
17 SEP 93	B1/B2 - 321/324/327	CHECK	16 JUL 93

D

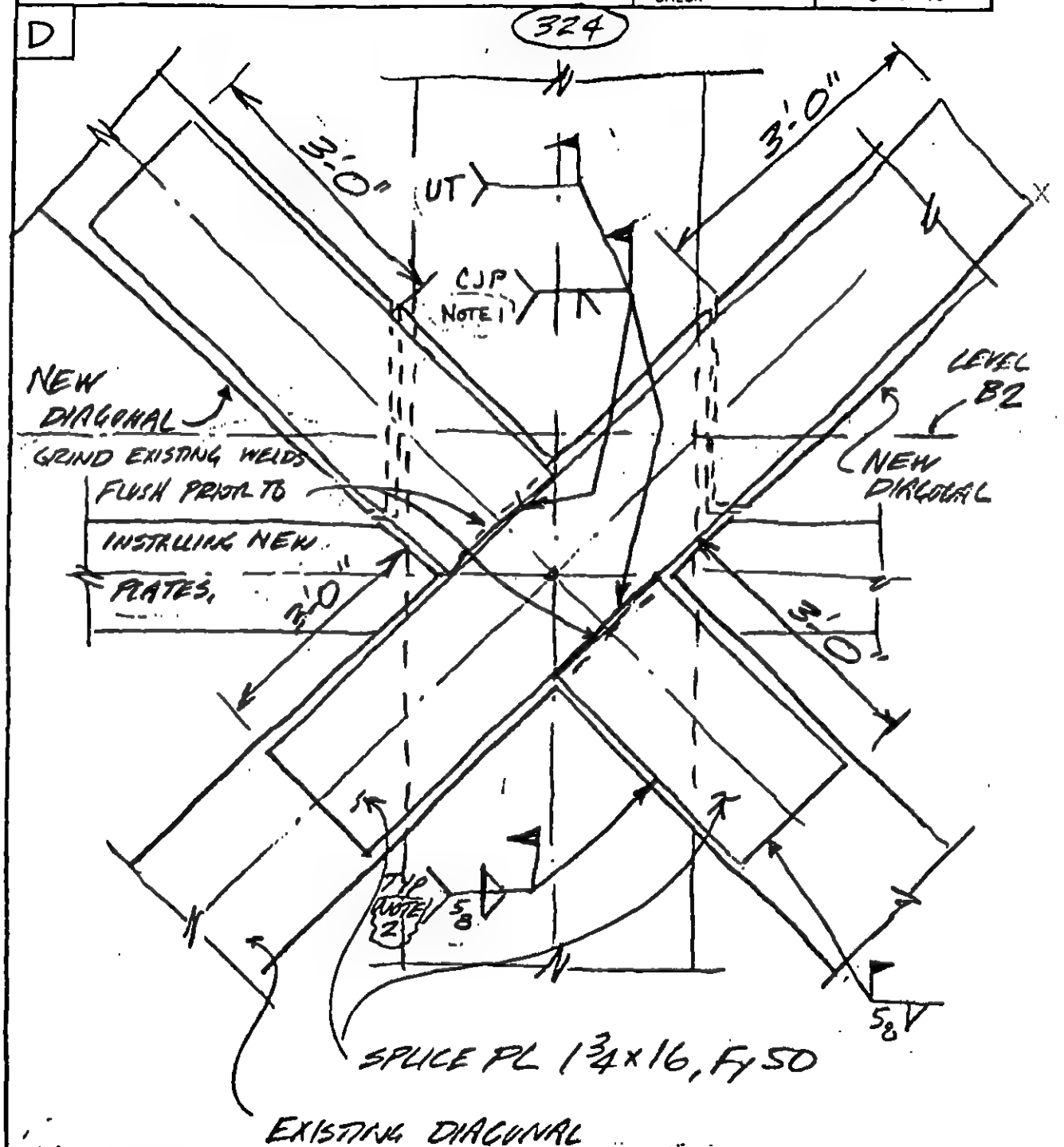

NOTES

1. COMPLETE CJP WELD PRIOR TO STARTING FILLET WELDS TO NEW DIAGONALS
2. IF GAP, SEE RE-T1SW-2-2K

CONFIDENTIAL

EXP 003766

REV.	LERA LESLIE E. ROBERTSON ASSOCIATES CONSULTING STRUCTURAL ENGINEERS	P 1003118	DRAWING NO.
27 Jul 93	WTC EXPLOSION	DRAFT	RE-TISW 2-2.5
10 Sep 93	DIAGONAL REPAIR B1/B2 - 321/324/327	DESIGN WJP	
17 SEP 93		CHECK	16 JUL 93

E

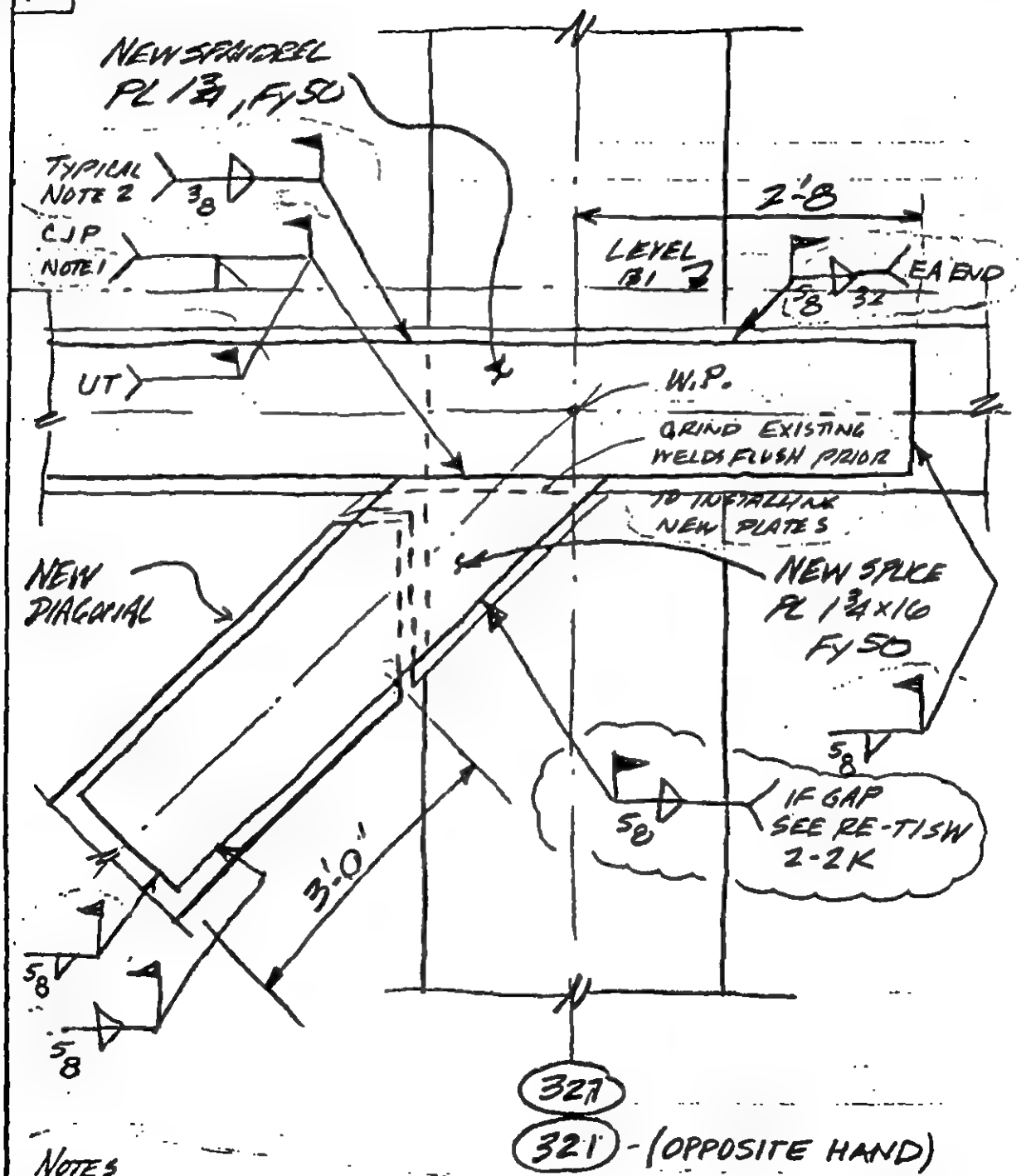

NOTES

1. COMPLETE CJP WELD PRIOR TO STARTING FILLET WELDS TO NEW DIAGONAL
2. WHERE BOTTOM OF SOUTH FACE OF SPANDREL IS BENT NORTH, PROVIDE BRACKETS IN LIEU OF ONE LINE OF WELD.

CONFIDENTIAL

REV.	LERA LESLIE E. ROBERTSON ASSOCIATES CONSULTING STRUCTURAL ENGINEERS	P 1003118	DRAWING NO. RE-T.1 SW
	WTC EXPLOSION	DRAFT	
	DIAGONAL REPAIR	DESIGN WJP	2-2.6
	B1/B2 -321/324/327	CHECK	27 JULY 93

F

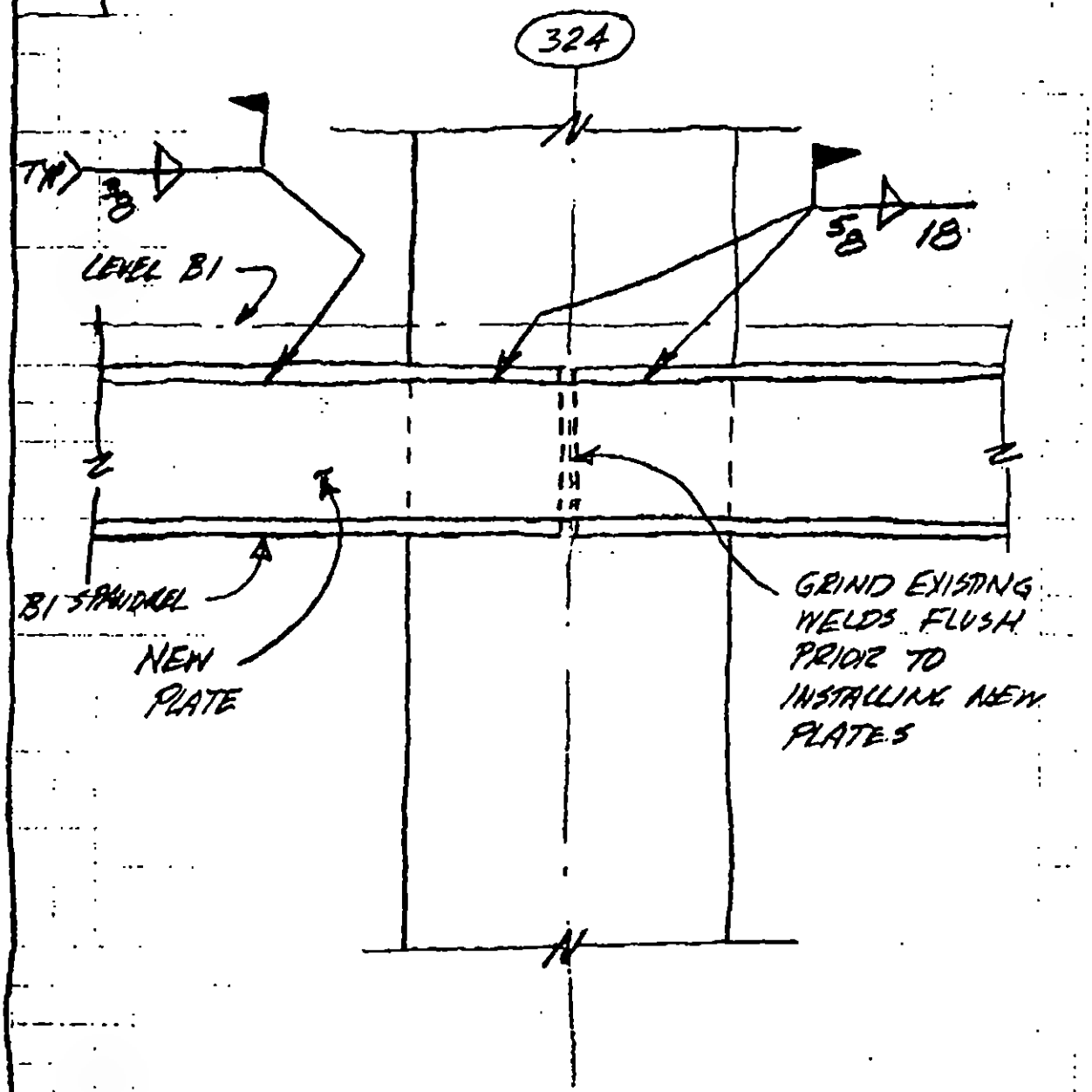

REV.	LERA LESLIE E. ROBERTSON ASSOCIATES CONSULTING STRUCTURAL ENGINEERS	P 1003118	DRAWING NO.
20SEP93	WTC EXPLOSION	DRAFT	RE-TISW
	DIAGONAL REPAIR	DESIGN WJP	2 - 2.7
	B1/B2 - 321/324/327	CHECK	2 SEPT 93

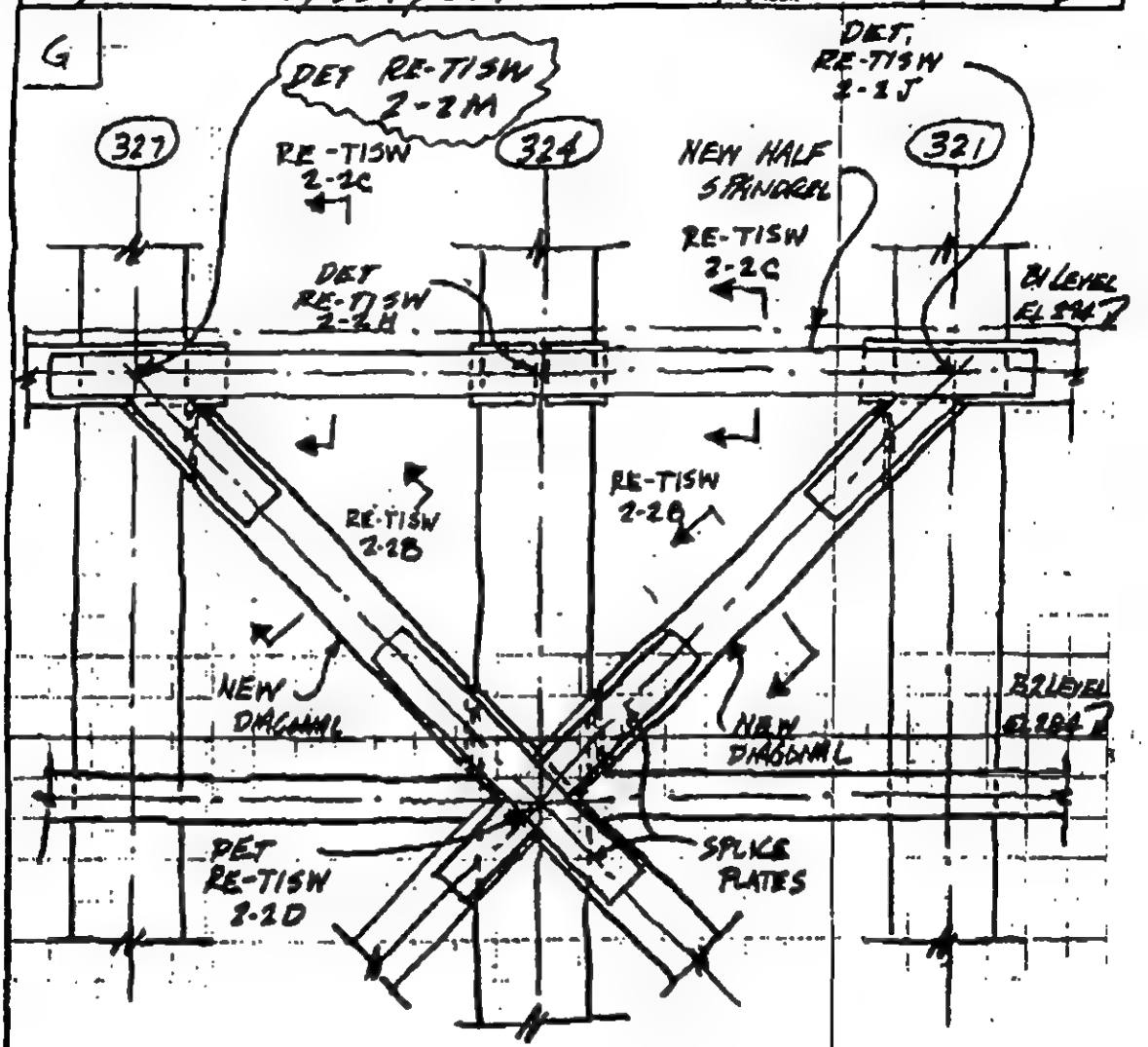

LOOKING NORTH

REV.	LERA LESLIE E. ROBERTSON ASSOCIATES CONSULTING STRUCTURAL ENGINEERS	P 1003118	DRAWING NO. RE-TISW
30SEP93	WTC EXPLOSION	DRAFT	
	DIAGONAL REPAIR	DESIGN WJP	2-2.8
	B1/B2 - 321/324/327	CHECK	25SEP93

H

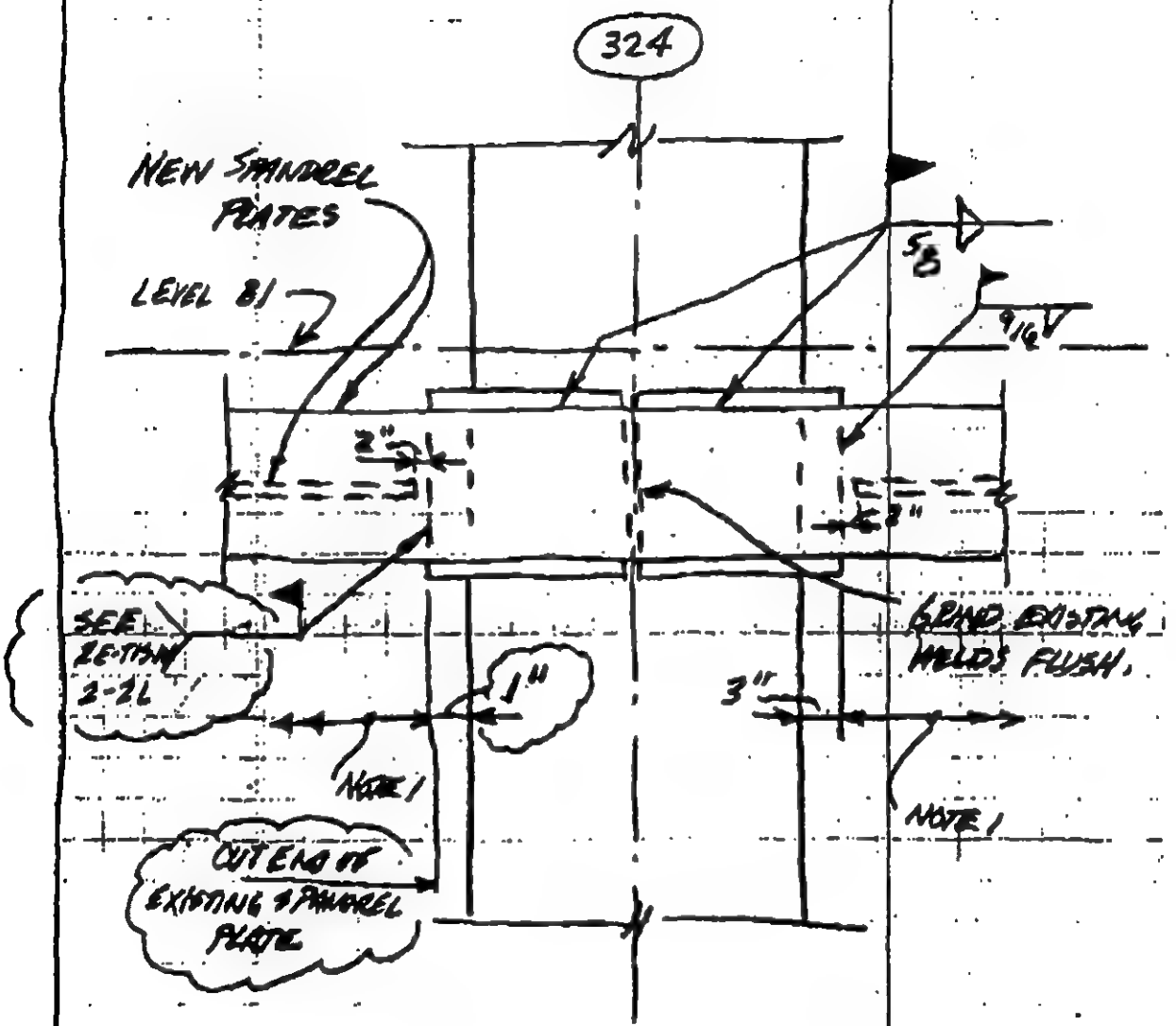

LOOKING NORTH

NOTES

1. WHERE NOTED, REMOVE SOUTH HALF OF EXISTING SPANDREL FLANGE AND WEB PRIOR TO INSTALLING NEW SPANDREL PLATES. DO NOT REMOVE EXISTING PL'S UNTIL AFTER COMPLETION OF CONNECTION REPAIRS TO NORTH SIDE OF COLUMN (SEE RE-TISW-5-1.1)

REV.	LERA LESLIE E. ROBERTSON ASSOCIATES CONSULTING STRUCTURAL ENGINEERS	P 1003118	DRAWING NO.
30SEP93	WTC EXPLOSION	DRAFT	RE-TISW
	DIAGONAL REPAIR	DESIGN WJP	2-2.9
	B1/B2 - 321/324/327	CHECK	25SEPT93

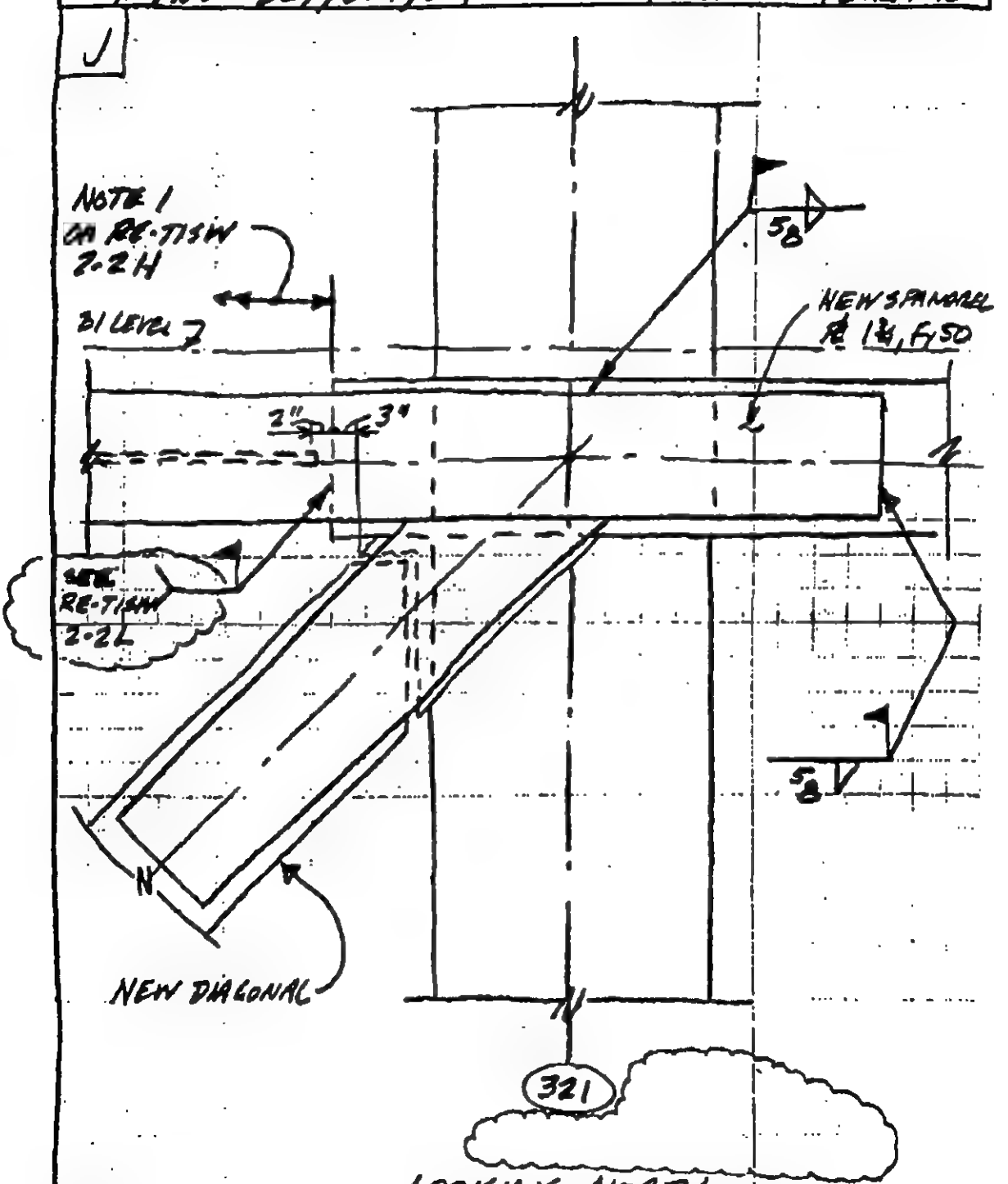

LOOKING NORTH

PARTS NOT SHOWN OR NOTED SAME AS RE-TISW-2.2E.

REV.	LERA LESLIE E. ROBERTSON ASSOCIATES CONSULTING STRUCTURAL ENGINEERS	P 100311B	DRAWING NO. RE-T1SW
	WTC - EXPLOSION	DRAFT	
	DIAGONAL REPAIR	DESIGN WJP	2-2.10
	B1/B2 - 321/324/327	CHECK	17SEP93

K

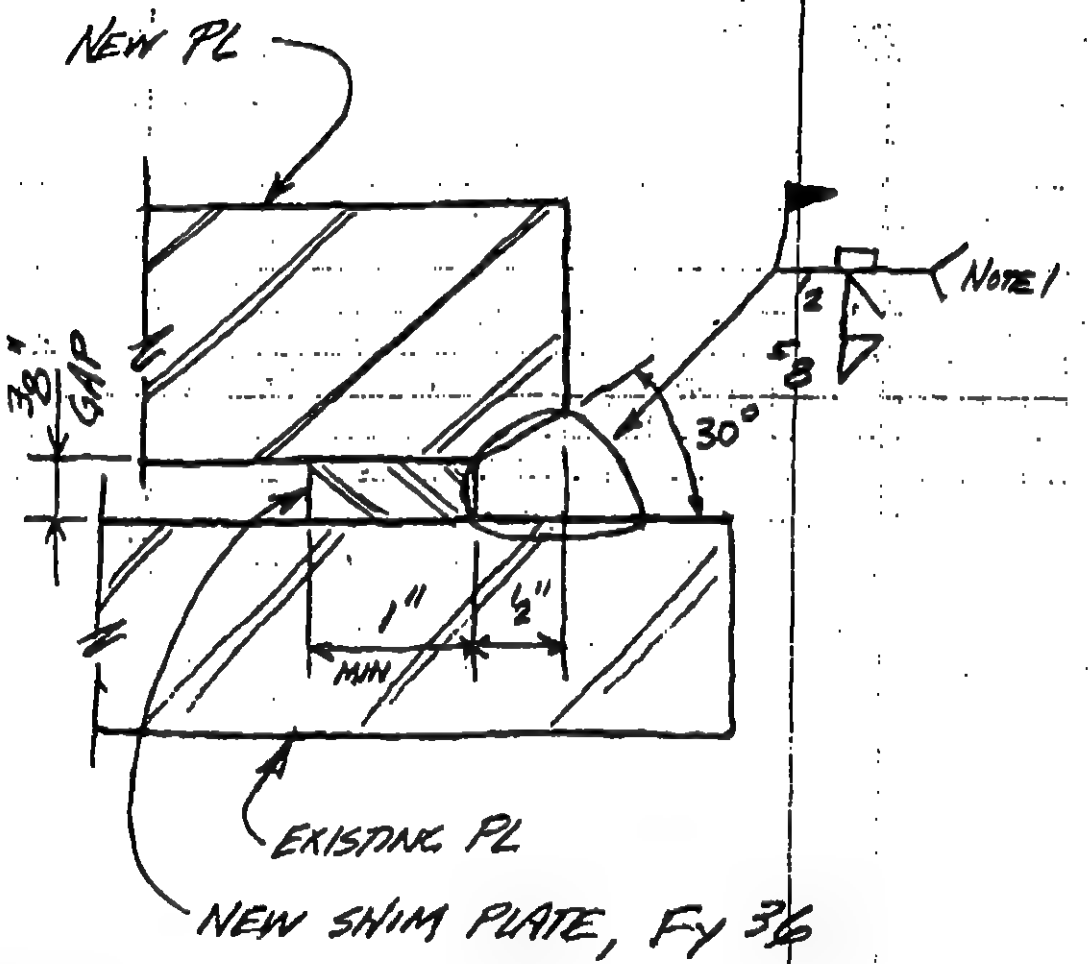

NOTES

1. AIR-ARC EDGE OF NEW PLATE PRIOR TO WELDING

REV.	LERA LESLIE E. ROBERTSON ASSOCIATES CONSULTING STRUCTURAL ENGINEERS	P 1003118	DRAWING NO. RE-T15W
	WTC - EXPLOSION	DRAFT	
	DIAGONAL REPAIR	DESIGN WJP	2-2.11
	81/82 - 321/324/327	CHECK	30SEP93

L

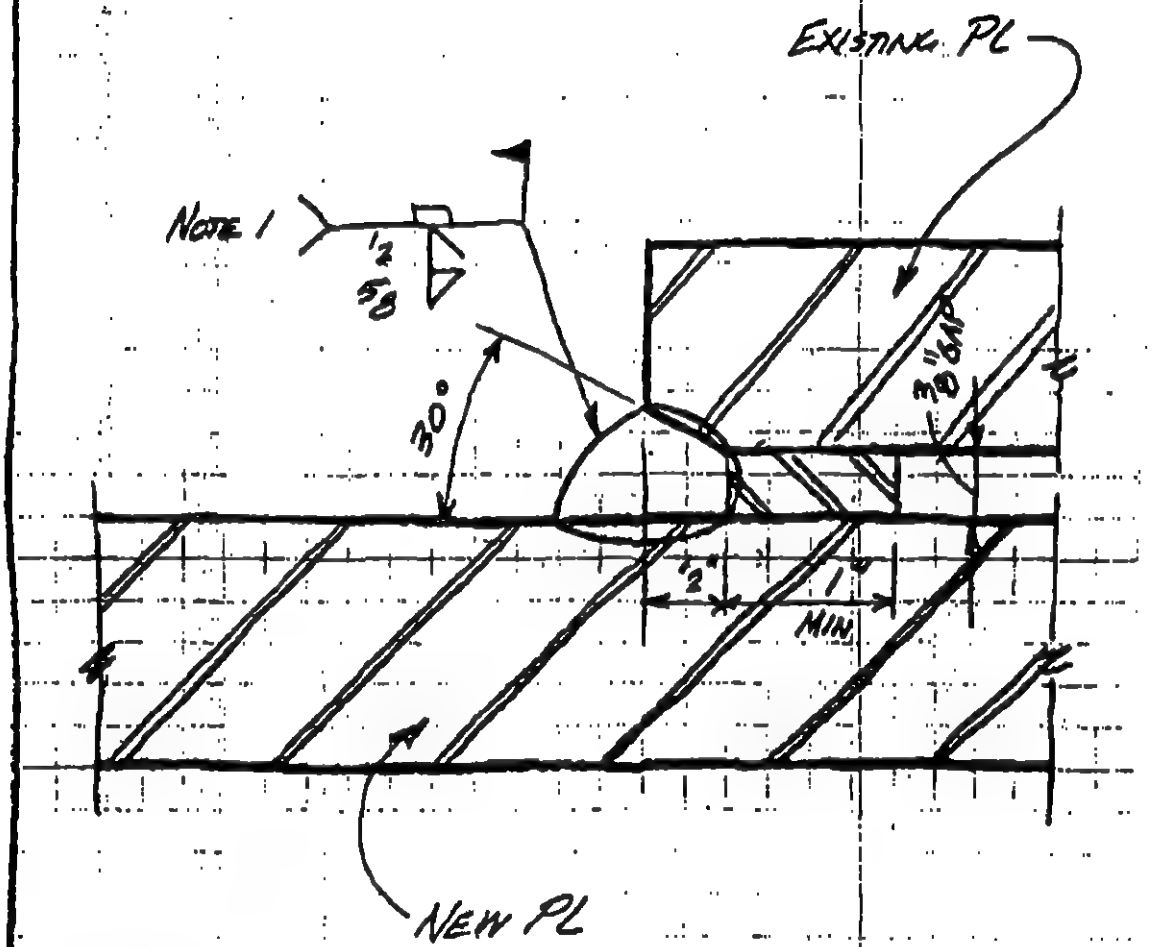

NOTES

1. AIR-ARC EDGE OF EXISTING PLATE PRIOR TO WELDING.

REV.	LERA LESLIE E. ROBERTSON ASSOCIATES CONSULTING STRUCTURAL ENGINEERS	P 1003118	DRAWING NO.
	WTC EXPLOSION	DRAFT	RE-T1SW
	DIAGONAL REPAIR	DESIGN WJP	2-2.12
	B1/B2 - 321/324/	CHECK	30SEP 93

M

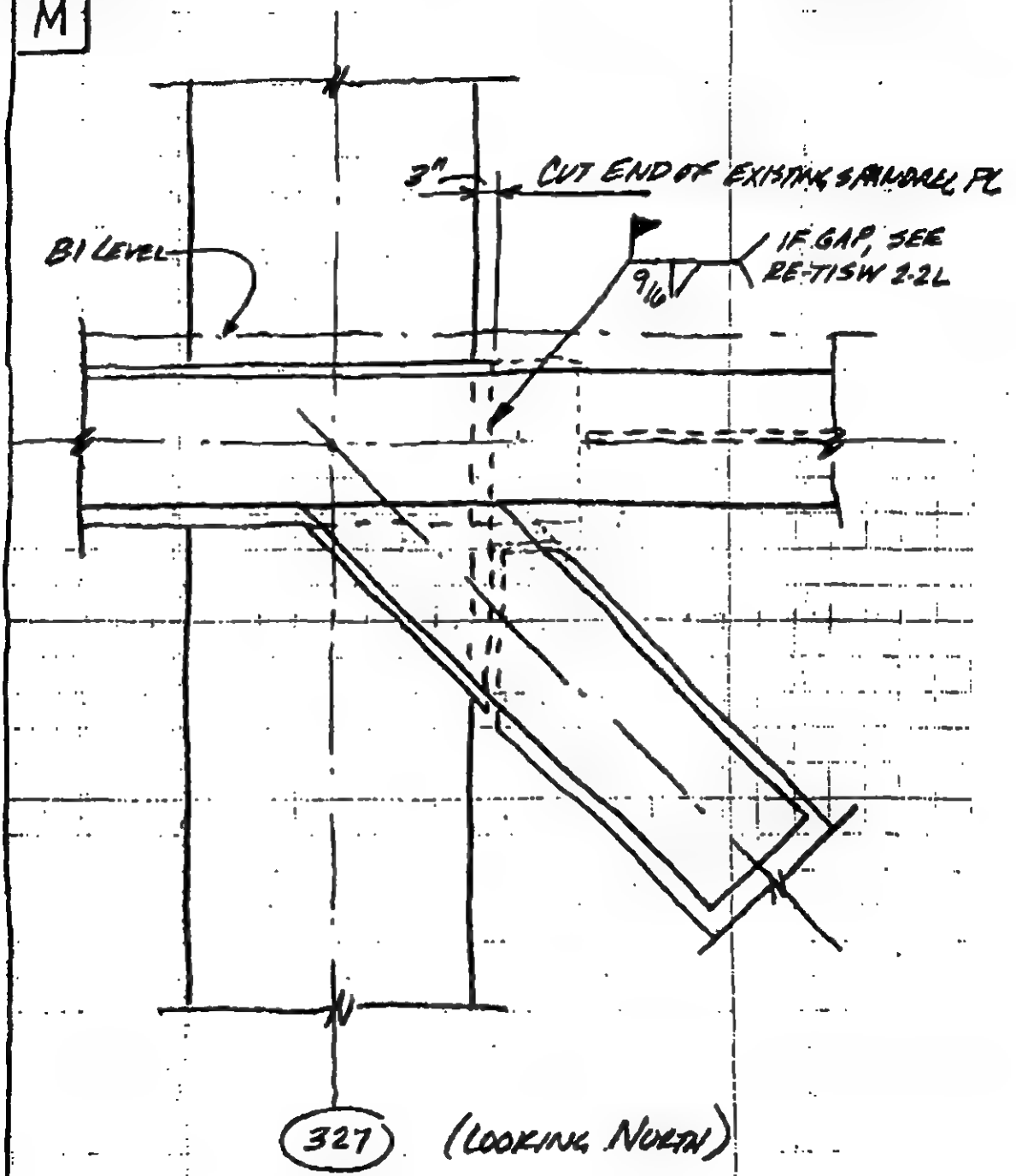

PARTS NOT SHOWN OR NOTED, SAME AS RE-T1SW-2-2J

REV.	LERA LESLIE E. ROBERTSON ASSOCIATES CONSULTING STRUCTURAL ENGINEERS	P 1003118	DRAWING NO.
7	WTC EXPLOSION	DRAFT KEH	RE-TISW
	DIAGONAL REPAIR	DESIGN KEH	2-3
	B2-B3/COLUMNS 321-324	CHECK	21 JUL 93

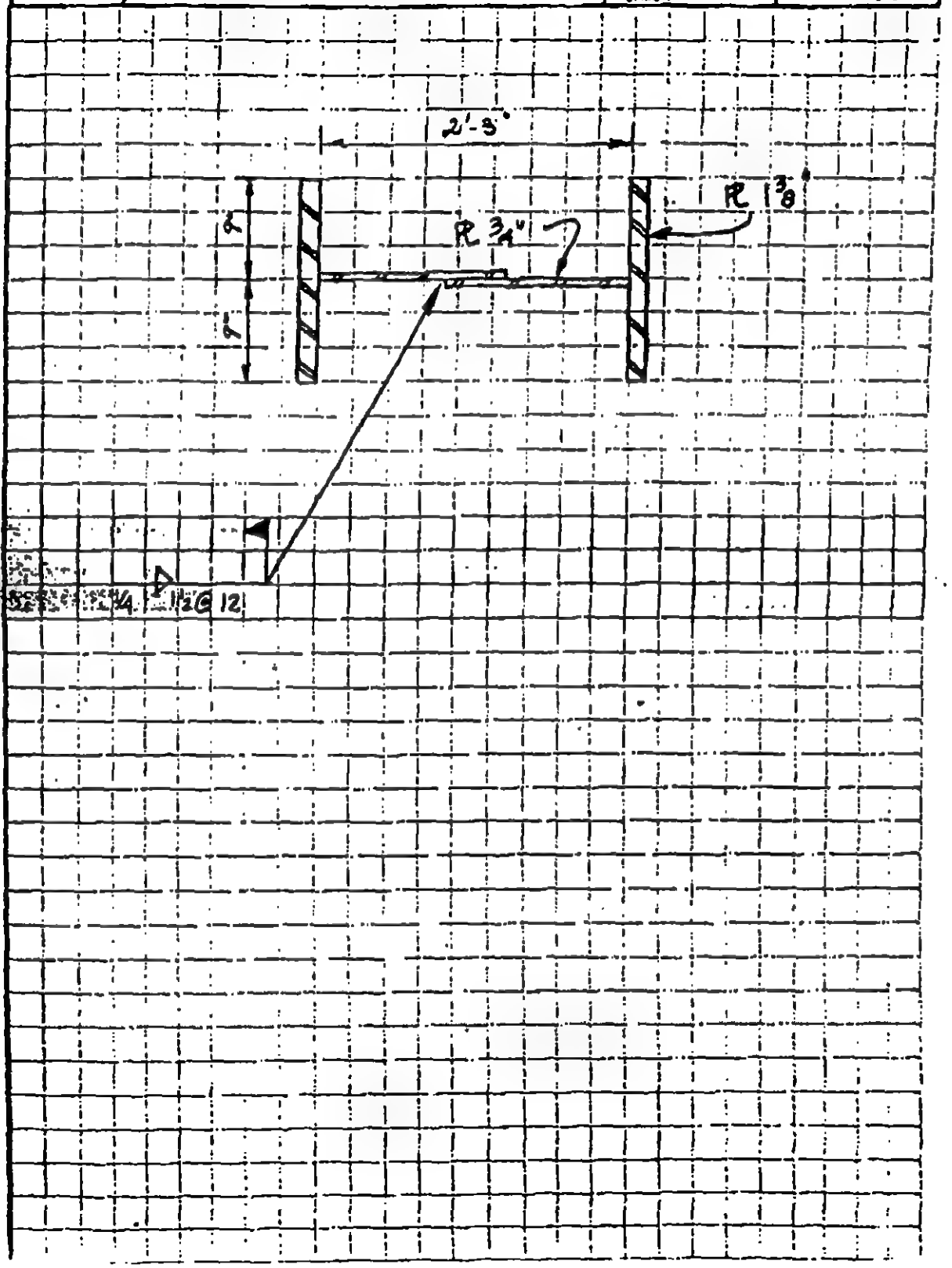

REV.	LERA LESLIE E. ROBERTSON ASSOCIATES CONSULTING STRUCTURAL ENGINEERS	P 1003118	DRAWING NO.
	WTC EXPLOSION	DRAFT KEH	RE-TISW
	B2 SPANDREL REPAIR	DESIGN KEH	3-1.2
	COLUMN 321 TO COLUMN 327	CHECK	21JUL93

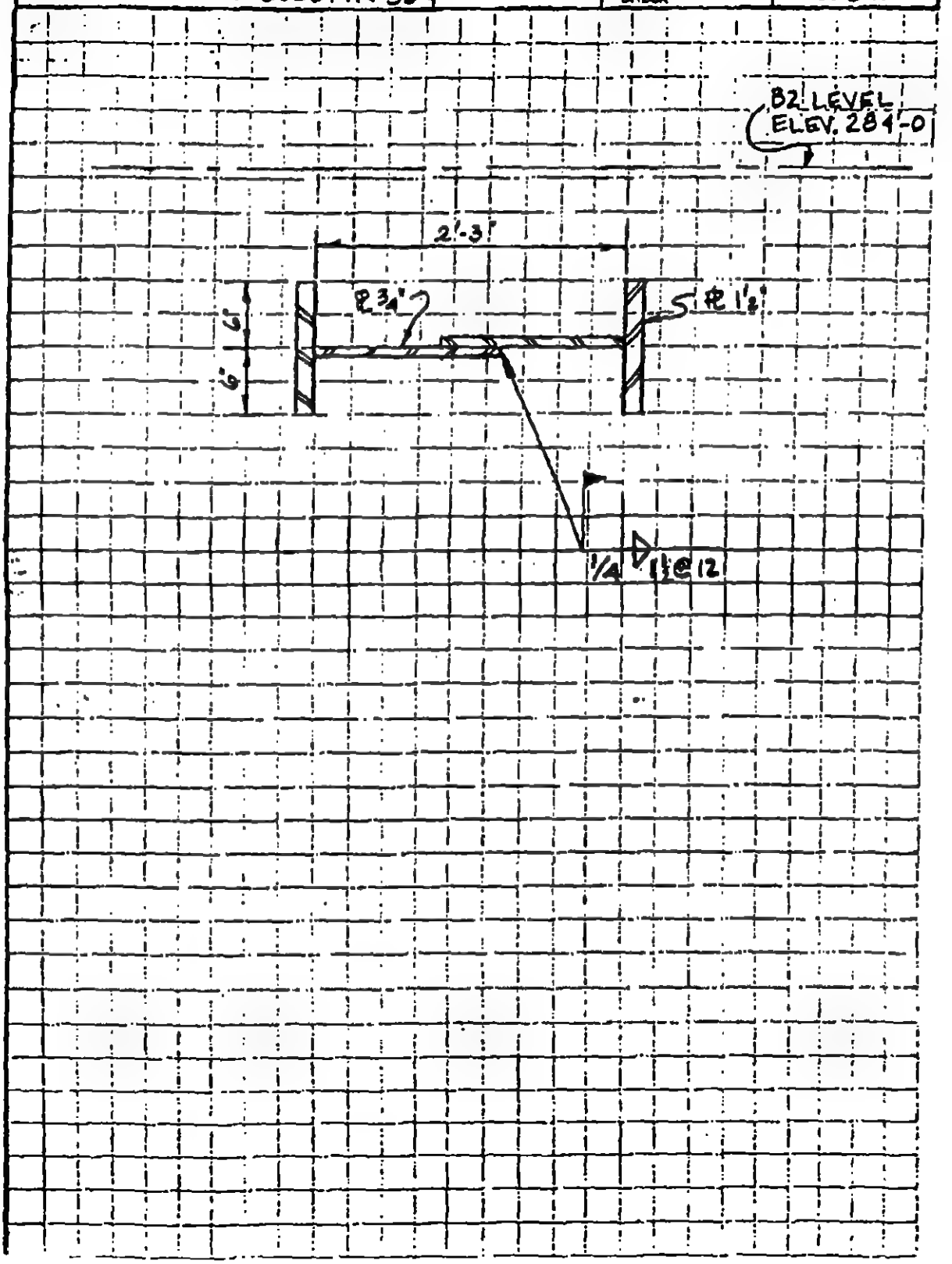

REV.	LERA LESLIE E. ROBERTSON ASSOCIATES CONSULTING STRUCTURAL ENGINEERS	P 1003118	DRAWING NO.
	WTC - EXPLOSION	DRAFT KEH	RE-TISW
	B1 SPANDREL REPAIR	DESIGN KEH	3-2
	COLUMN 324 TO COLUMN 327	CHECK	21JUL93

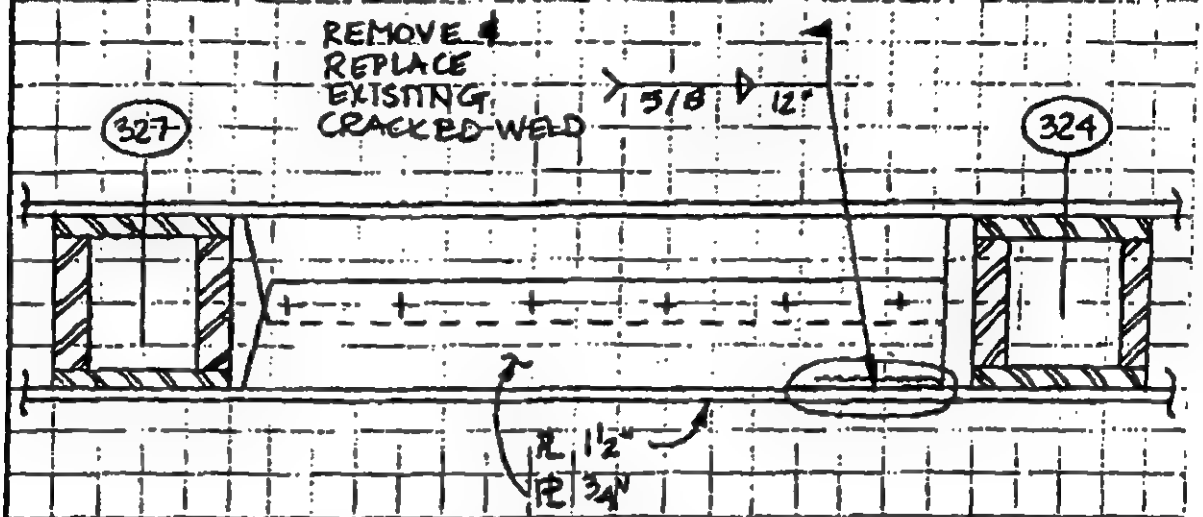

B1 SPANDREL - TOP VIEW

REV.	LERA LESLIE E. ROBERTSON ASSOCIATES CONSULTING STRUCTURAL ENGINEERS	P 1003118	DRAWING NO.
7/27/93	WTC - EXPLOSION	DRAFT KEH	RE-T1SW
7/28/93	CONNECTION REPAIR	DESIGN KEH	4-1
25EP93	COLUMN 321 @ B1	CHECK	21 JUL 93

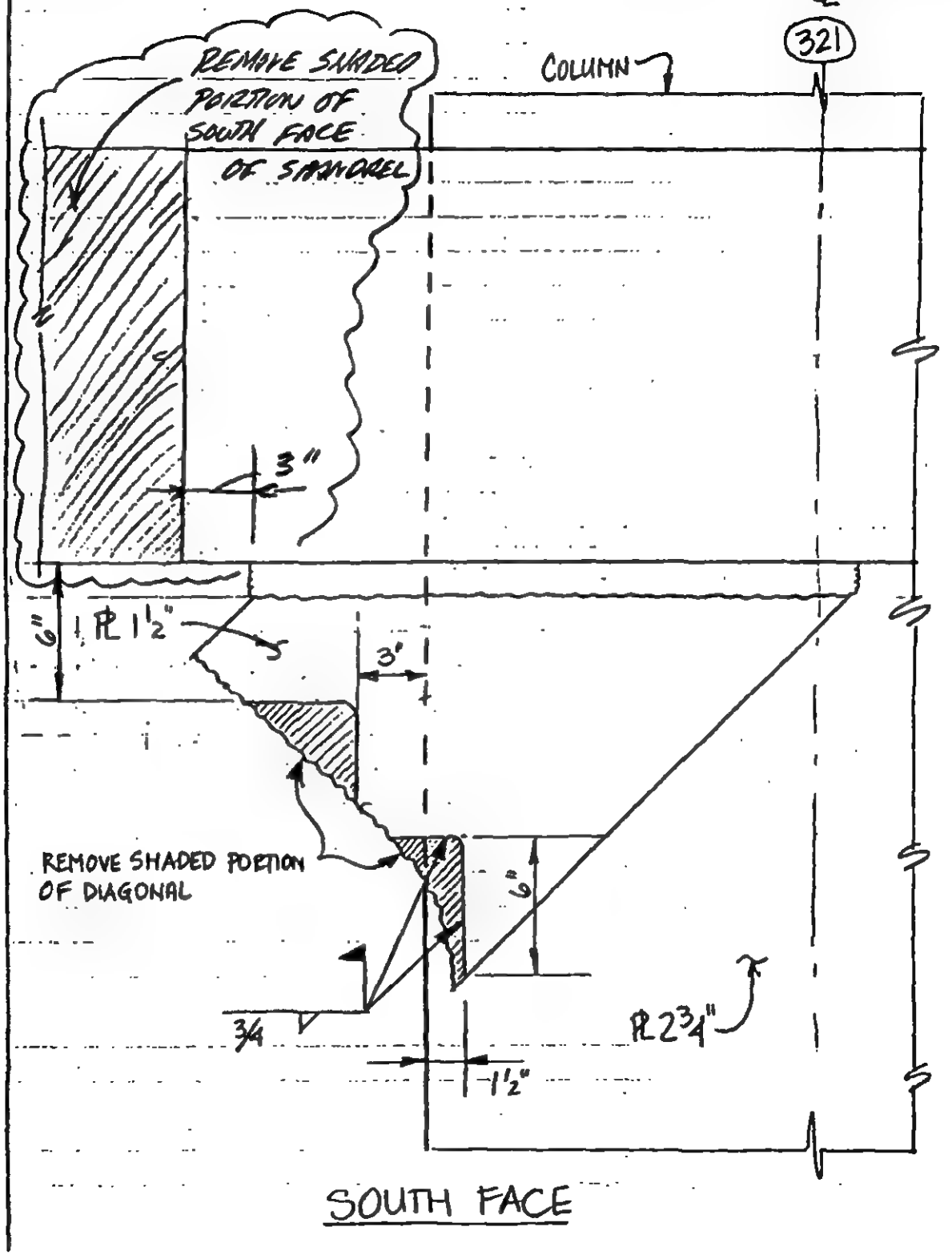

SOUTH FACE

CONFIDENTIAL

EXP 003778

REV.	LERA LESLIE E. ROBERTSON ASSOCIATES CONSULTING STRUCTURAL ENGINEERS	P 1003118	DRAWING NO.
16 Aug 93	WTC - EXPLOSION	DRAFT KEH	RE-TISW
25 Sep 93	CONNECTION REPAIR	DESIGN KEH	4-2.1
	COLUMN 324 @ B1	CHECK	21 JUL 93

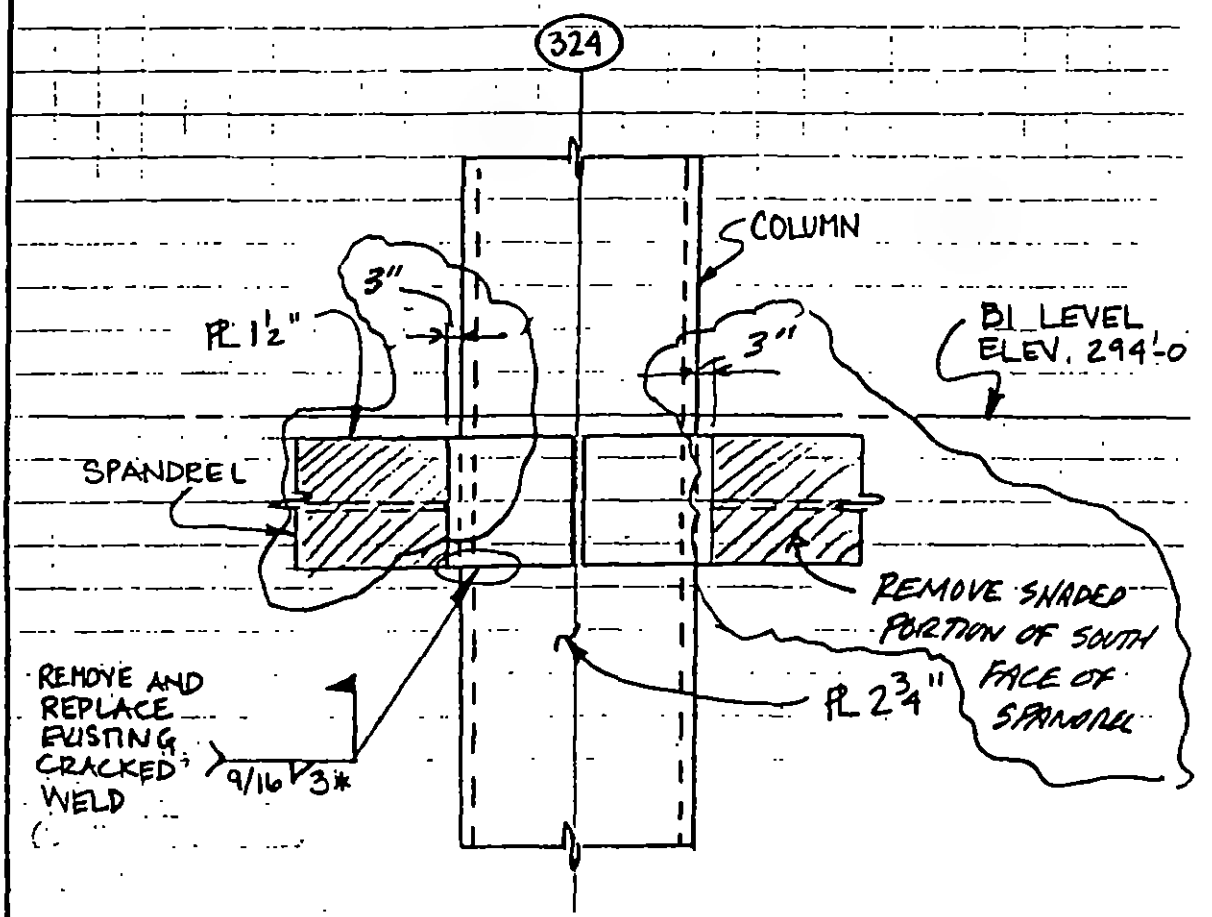

SOUTH FACE

* SEE NOTES RE-TISW-1-3

REV.	LERA LESLIE E. ROBERTSON ASSOCIATES CONSULTING STRUCTURAL ENGINEERS	P 1003118	DRAWING NO. RE-T1SW
25SEP93	WTC - EXPLOSION	DRAFT	4-2.2
	CONNECTION REPAIR COLUMN 324 @ B1	DESIGN WJP	
		CHECK	16AUG 93

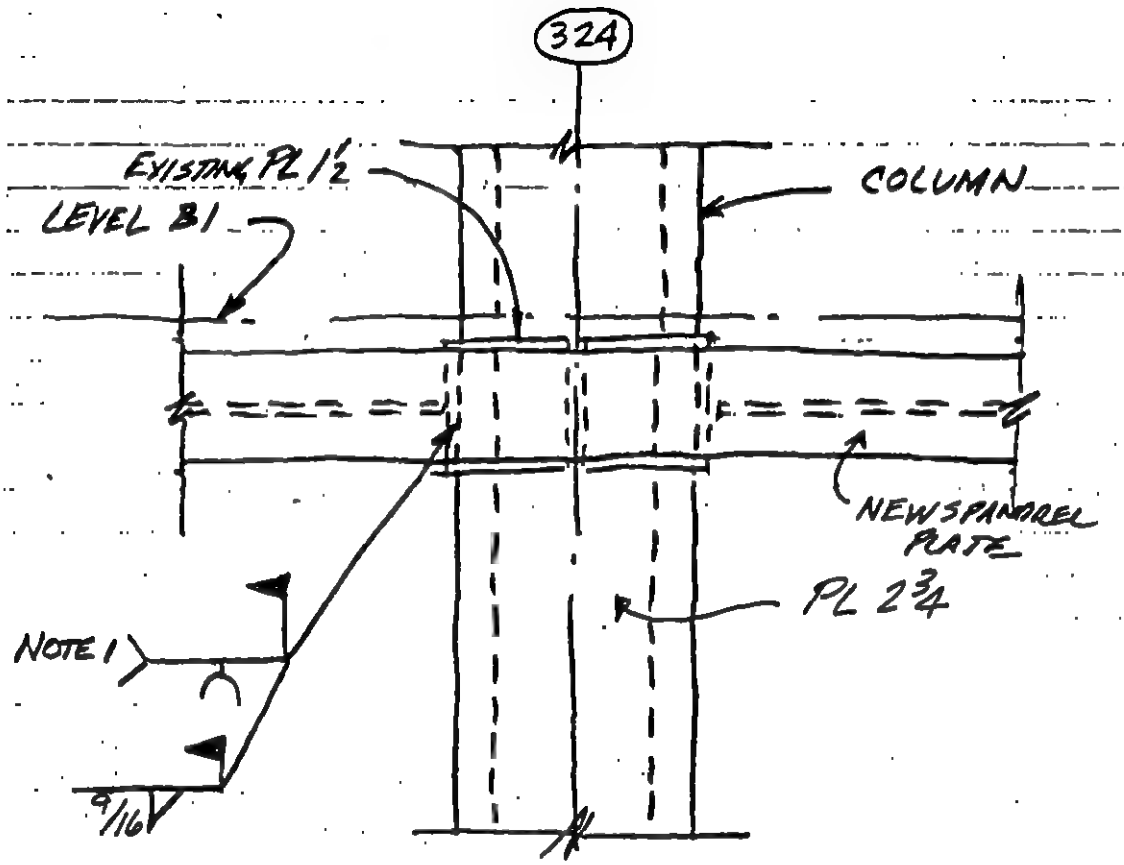

SOUTH FACE

NOTES

1. AIR-ARC CRACK IN EXISTING SPANDREL PLATE PRIOR TO INSTALLATION OF NEW SPANDREL PLATE.

2. SEE RE-T1SW-1-3 FOR ADDITIONAL NOTES.

REV.	LERA LESLIE E. ROBERTSON ASSOCIATES CONSULTING STRUCTURAL ENGINEERS	P 003118	DRAWING NO.
7-27-93	WTC - EXPLOSION	DRAFT KEH	RE-TISW
9-2-93	CONNECTION REPAIR	DESIGN KEH	4-3.1
	COLUMN 327 @ B1	CHECK	21 JUL 93

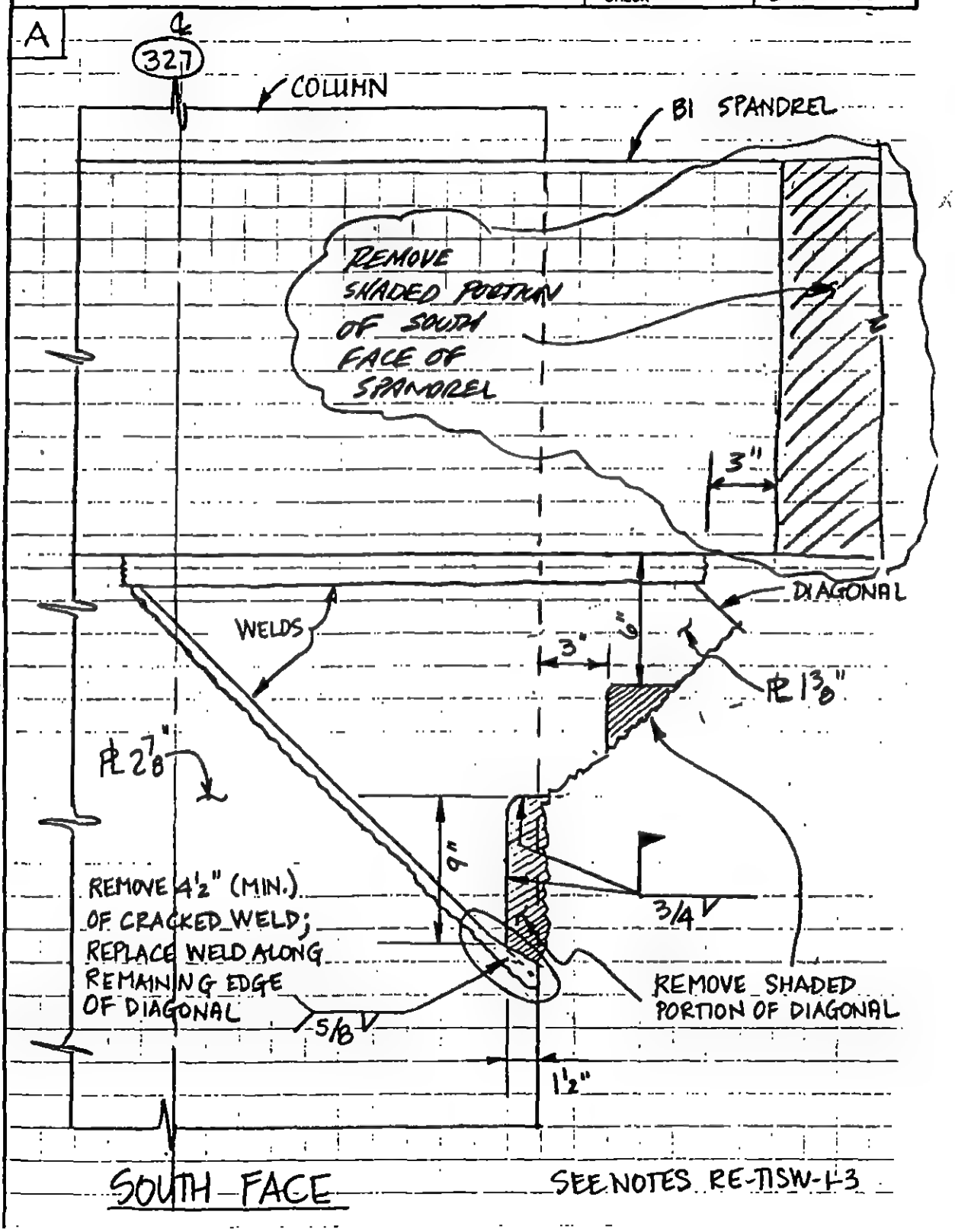

REV.	LERA LESLIE E. ROBERTSON ASSOCIATES CONSULTING STRUCTURAL ENGINEERS	P 1003118	DRAWING NO.
	WTC-EXPLOSION	DRAFT KEH	RE-TISW 4-3.2
	CONNECTION REPAIR COLUMN 327 @ B1	DESIGN KEH	
		CHECK	21 JUL 93

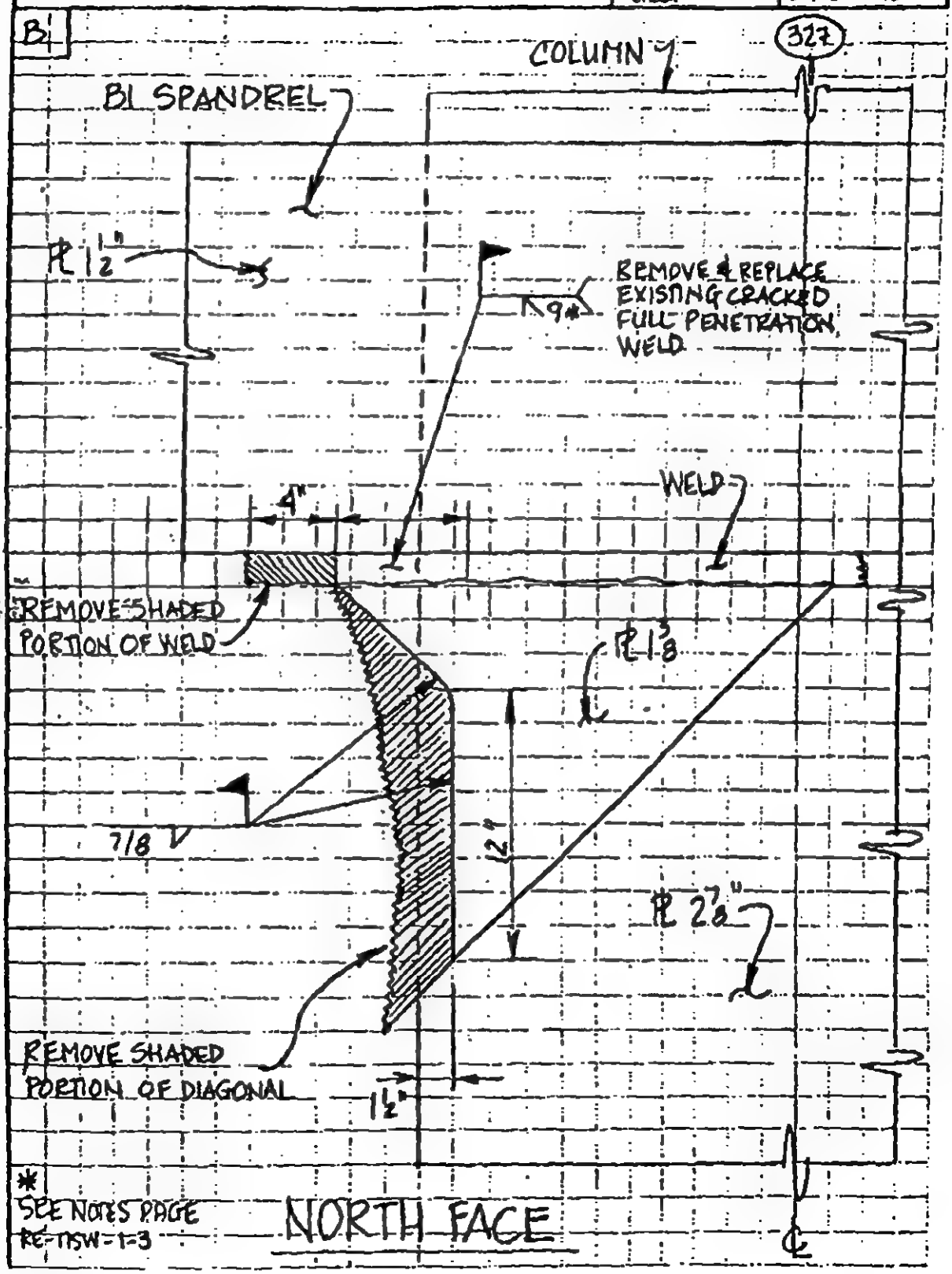

REV.	LERA LESLIE E. ROBERTSON ASSOCIATES CONSULTING STRUCTURAL ENGINEERS	P 1003118	DRAWING NO.
7/23/93	WTC-EXPLOSION	DRAFT KEH	RE-TISW 4-4 (.1)
	CONNECTION REPAIR	DESIGN KEH	
	COLUMN 321 @ B2	CHECK	21JUL93

A

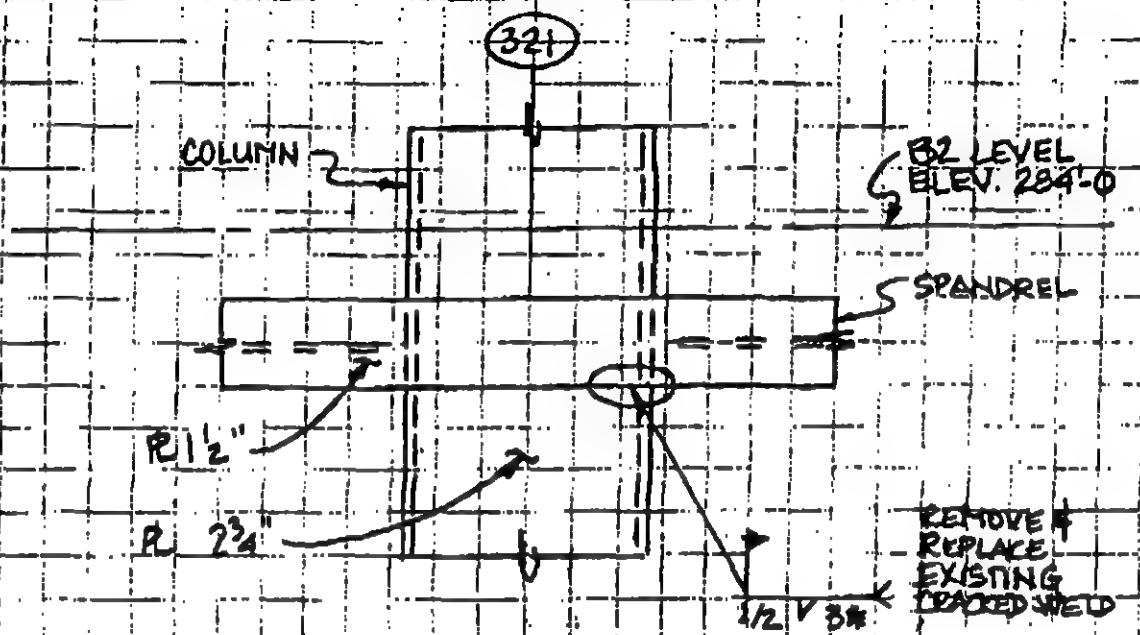

* SEE NOTES RE-TISW - 1-3

REV.	LERA LESLIE E. ROBERTSON ASSOCIATES CONSULTING STRUCTURAL ENGINEERS	P 1003118	DRAWING NO.
	WTC- EXPLOSION	DRAFT KEH	RE-T5SW 4-1.2
	CONNECTION REPAIR	DESIGN KEH	
	COLUMN 321 @ B2	CHECK	23 JUL 93

B'

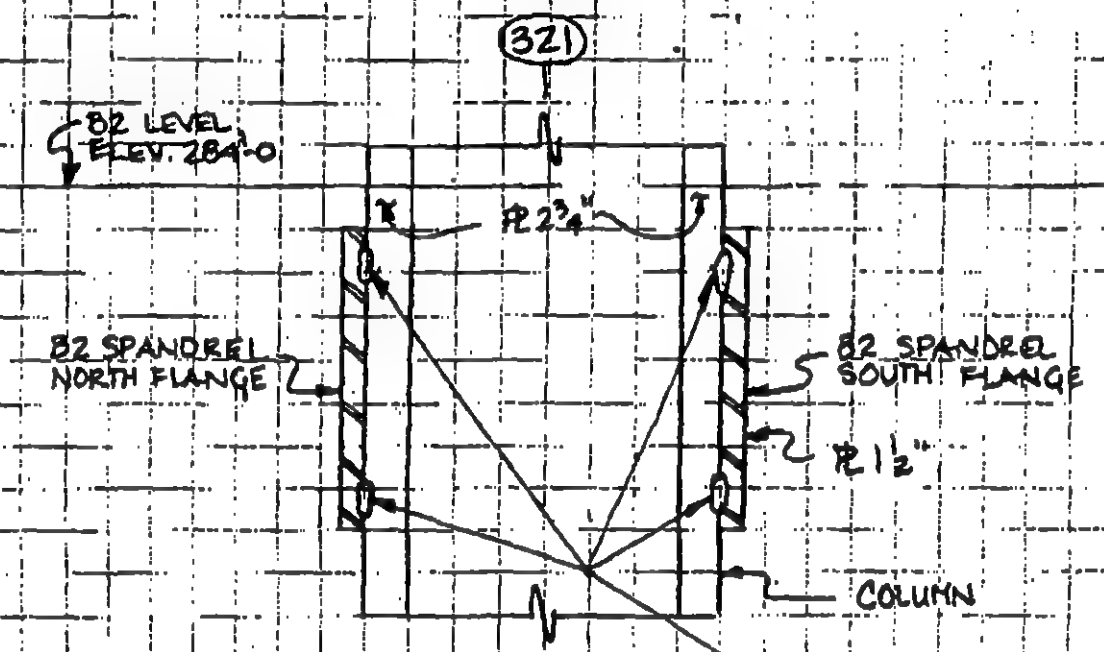

WEST FACE

REMOVE EXISTING DAMAGED WELDS.
REMOVE ANY ADDITIONAL CRACKS
IN SURROUNDING COLUMN OR
SPANDREL PLATES. FILL GOUGES
& REPLACE WELD.

5/16 1 1/2

REV.	LERA LESLIE E. ROBERTSON ASSOCIATED CONSULTING STRUCTURAL ENGINEERS	P 1003118	DRAWING NO.
7-27-93	WTC - EXPLOSION	DRAFT KEH	RE-TISW 4-5.1
	CONNECTION REPAIR COLUMN 324 @ B2	DESIGN KEH	
		CHECK	21 JUL 93

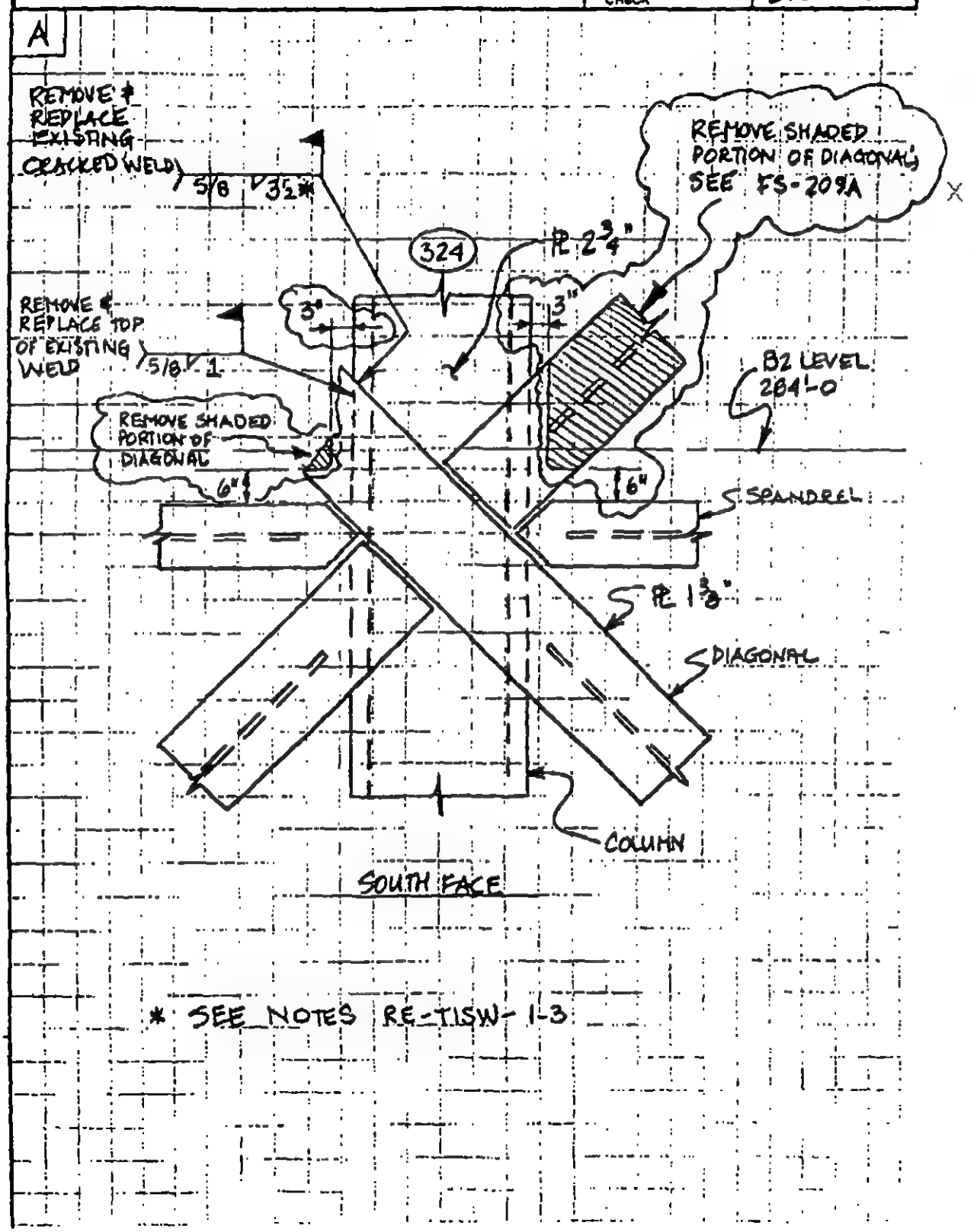

* SEE NOTES RE-TISW-1-3

REV.	LERA LESLIE E. ROBERTSON ASSOCIATES CONSULTING STRUCTURAL ENGINEERS	P 1003118	DRAWING NO.
7-27-93	WTC-EXPLOSION	DRAFT KEH	RE-TISW
	CONNECTION REPAIR	DESIGN KEH	4-5.2
	COLUMN 324 @ B2	CHECK	21 JUL 93

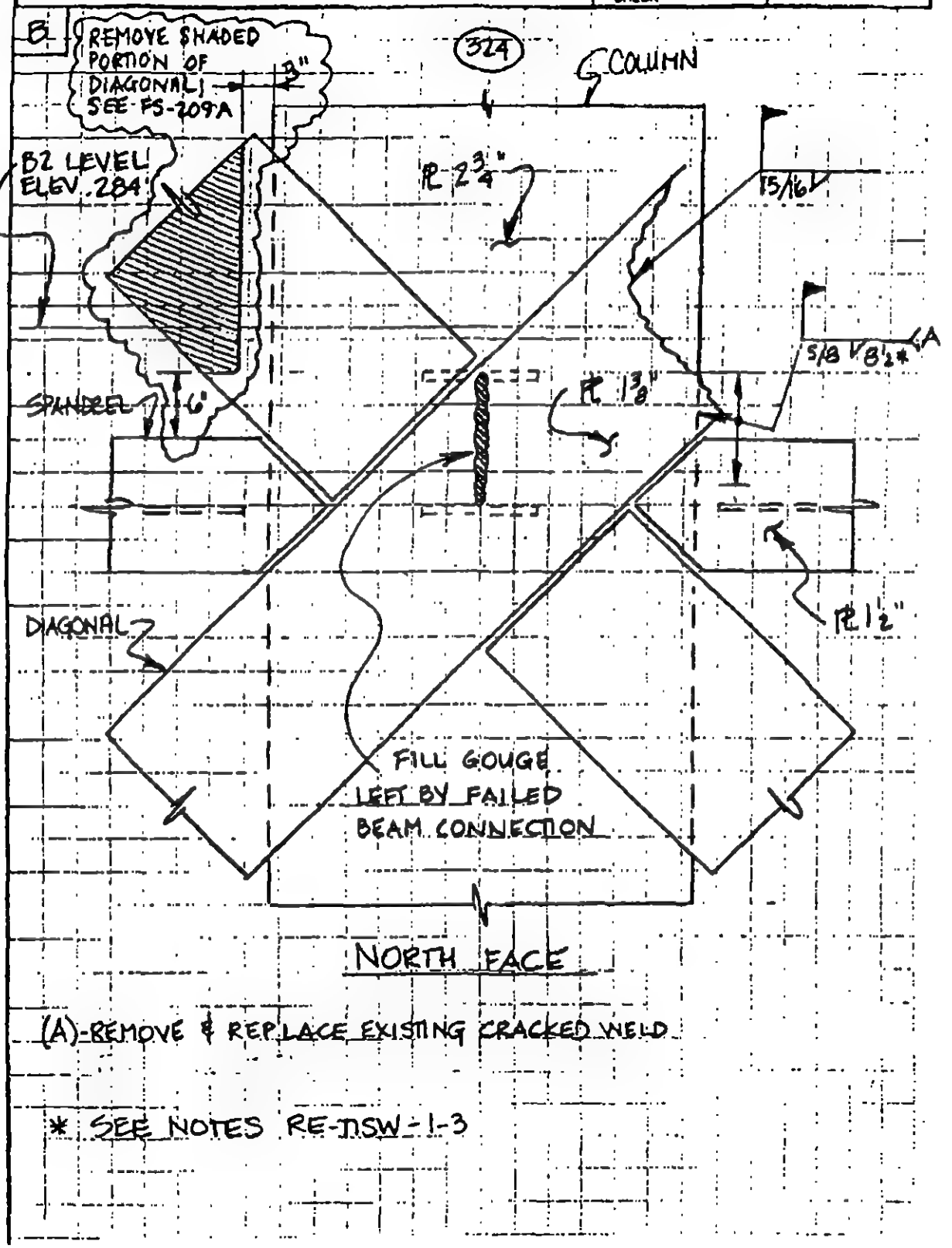

(A)-REMOVE & REPLACE EXISTING CRACKED WELD

* SEE NOTES RE-TISW-1-3

REV.	LERA LESLIE E. ROBERTSON ASSOCIATES CONSULTING STRUCTURAL ENGINEERS	P 100318	DRAWING NO.
	WTC EXPLOSION	DRAFT KEH	RE-TISW
	CONNECTION REPAIR	DESIGN KEH	4-6
	COLUMN 327 @ B3	CHECK	21JUL93

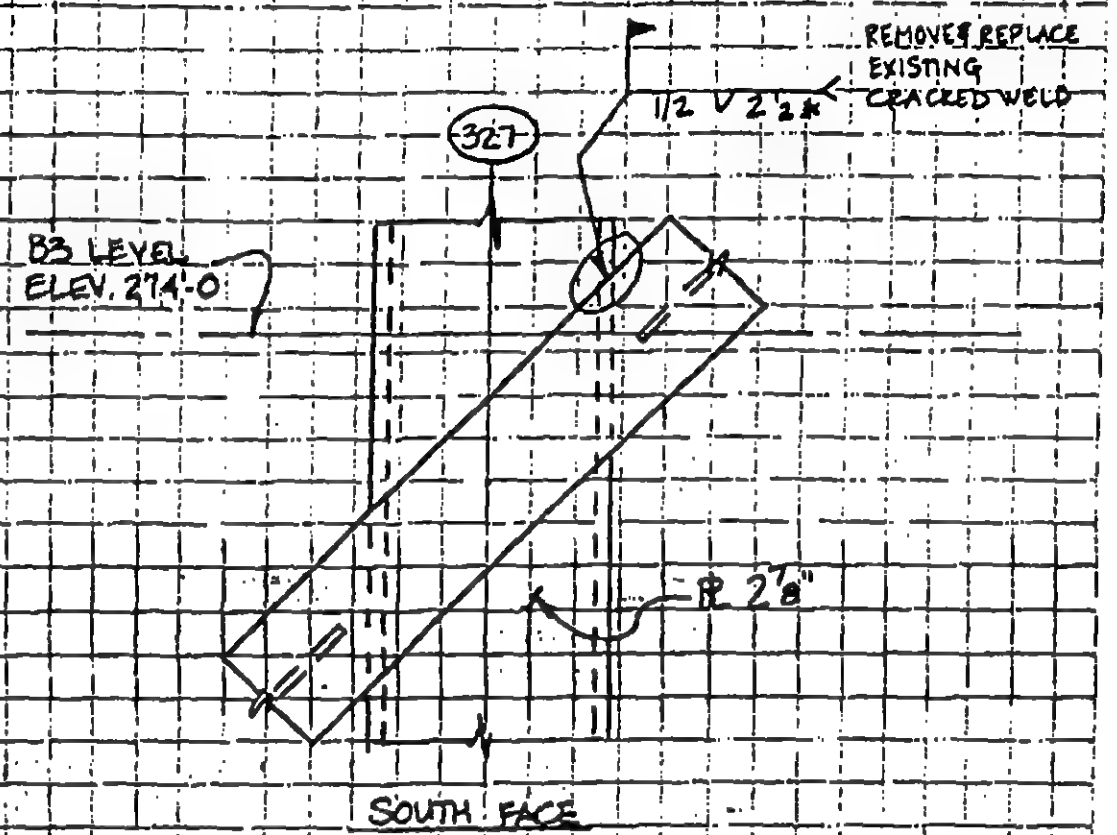

* SEE NOTES RE-TISW-1-3

REV.	LERA LESLIE E. ROBERTSON ASSOCIATES CONSULTING STRUCTURAL ENGINEERS	P 1003118	DRAWING NO.
	WTC- EXPLOSION	DRAFT KEH	RE-T1SW
	CONNECTION REPAIR	DESIGN KEH	4-7
	COLUMN 327 @ B2	CHECK	23 JUL 93

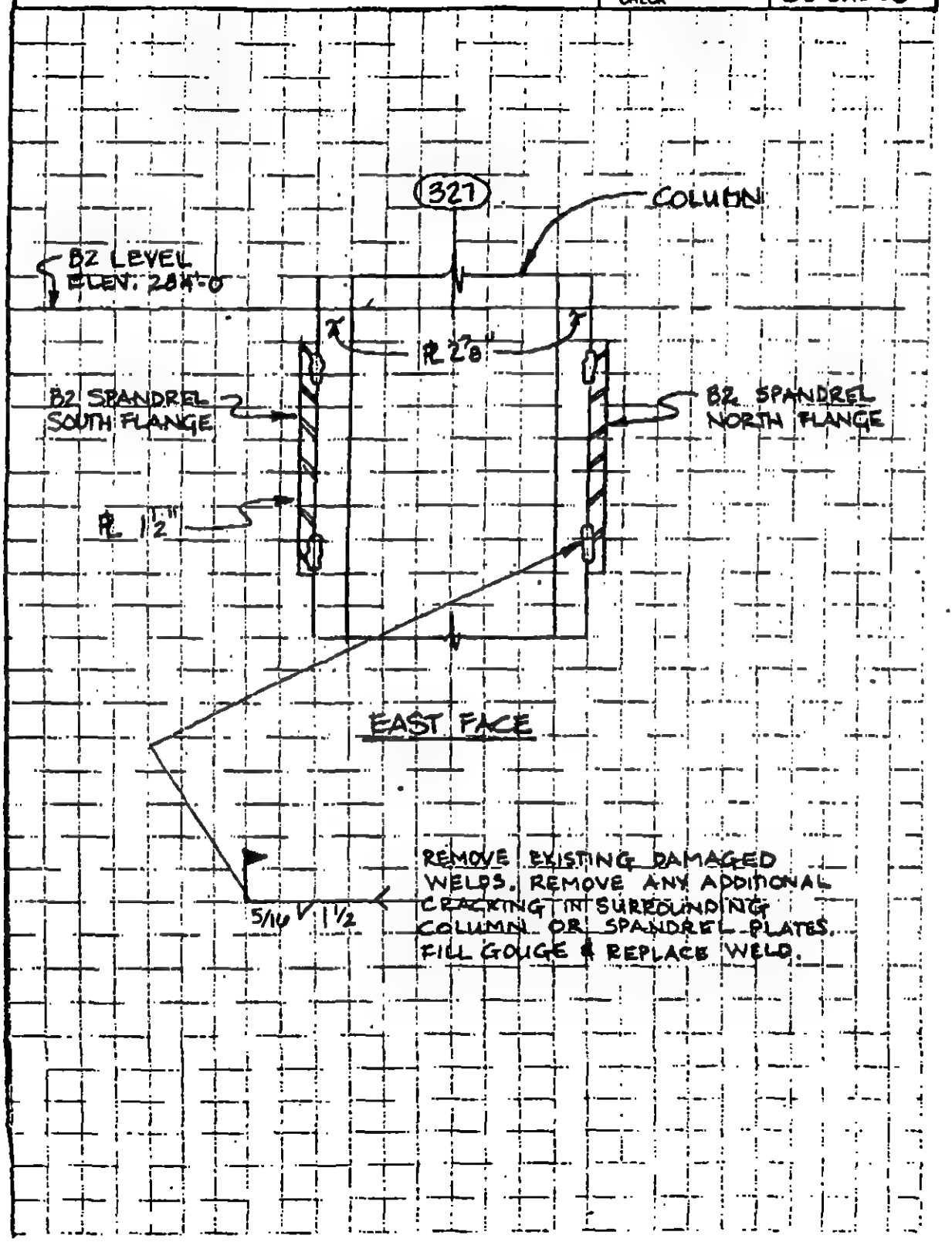

REV.	LERA LESLIE E. ROBERTSON ASSOCIATES CONSULTING STRUCTURAL ENGINEERS	P 1003118	DRAWING NO.
	WTC - RECONSTRUCTION	DRAFT NPM	RE-T1SW 5-1.1
	1 WTC - B1 LEVEL BEAM REPAIR	DESIGN NPM	
		CHECK	8.17.93

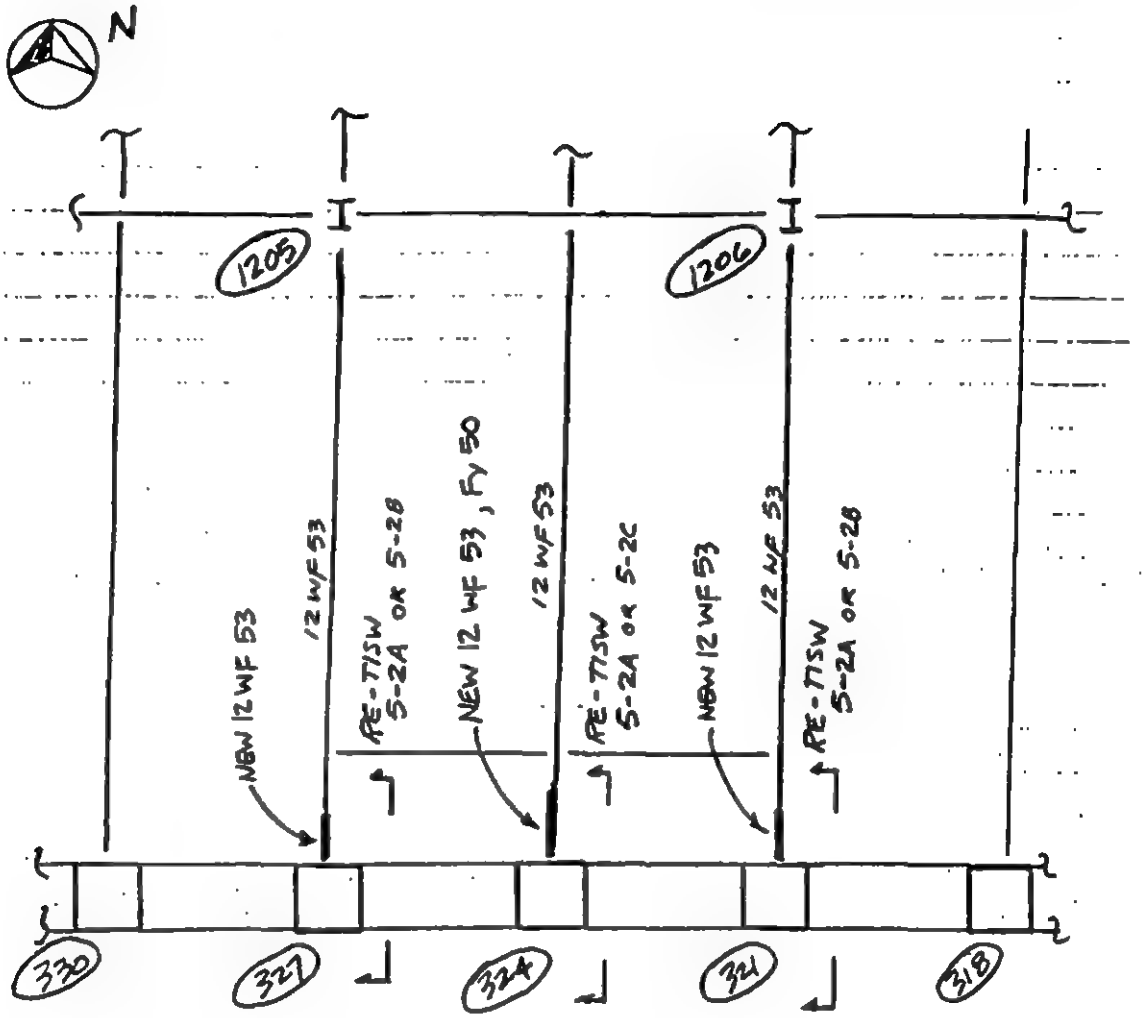

PART PLAN - 1 WTC B1 LEVEL

UNLESS OTHERWISE NOTED, ALL NEW BEAMS SHALL HAVE A YIELD STRENGTH OF 36 KSI MINIMUM.

REV.	LERA LESLIE E. ROBERTSON ASSOCIATES CONSULTING STRUCTURAL ENGINEERS	P 1003118	DRAWING NO.
	WTC - RECONSTRUCTION	DRAFT NPM	RE-T1SW
	1 WTC - B2 LEVEL BEAM REPAIR	DESIGN NPM	5-1.2
		CHECK	8.17.93

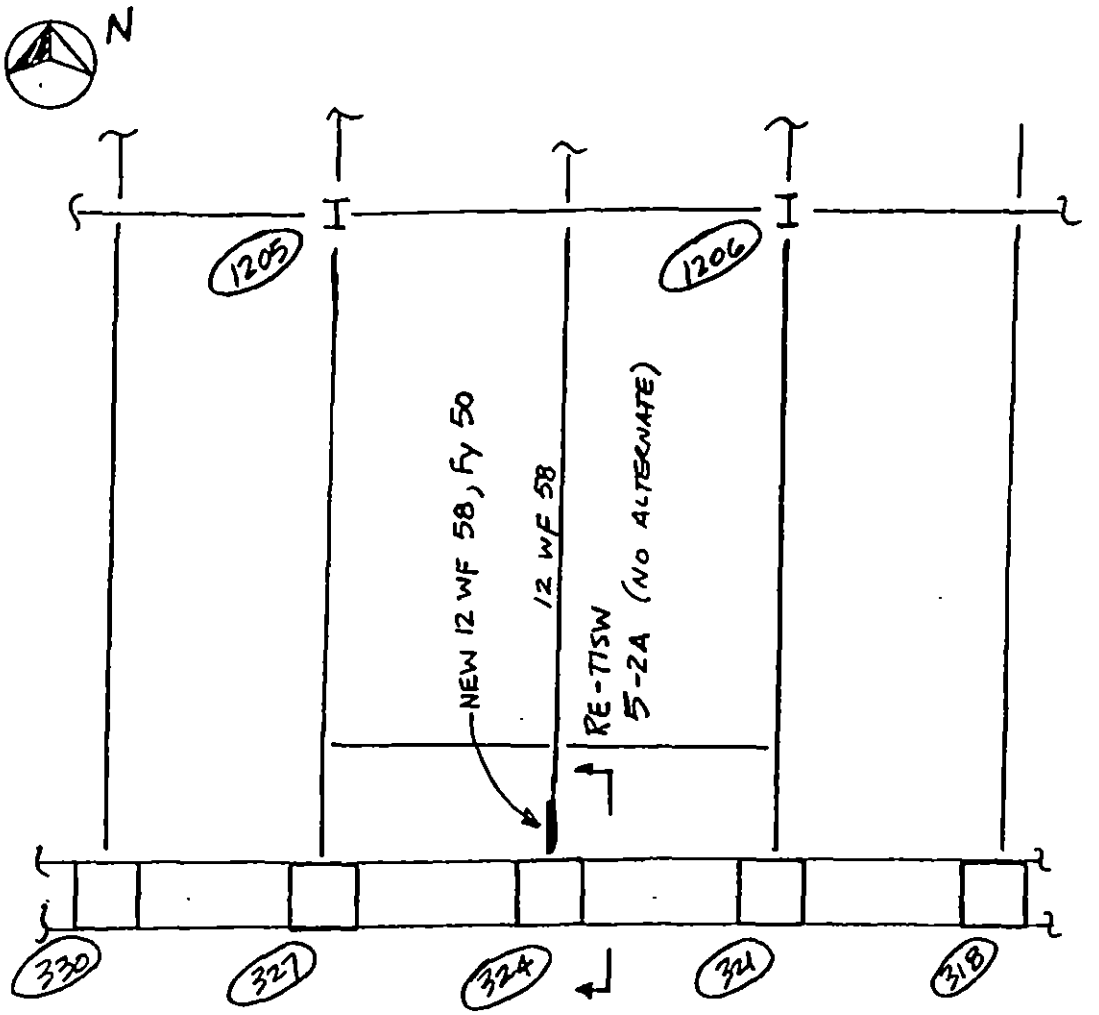

PART PLAN - 1 WTC B2 LEVEL

REV.	LERA LESLIE E. ROBERTSON ASSOCIATES CONSULTING STRUCTURAL ENGINEERS	P 1003118	DRAWING NO.
10-SEP-93	WTC- RECONSTRUCTION	DRAWN WPM	RE-T1SW
3-NOV-93		DESIGN WPM	5-2.1
	1 WTC- BEAM REPAIR DETAILS	CHECK	8-17-93

A

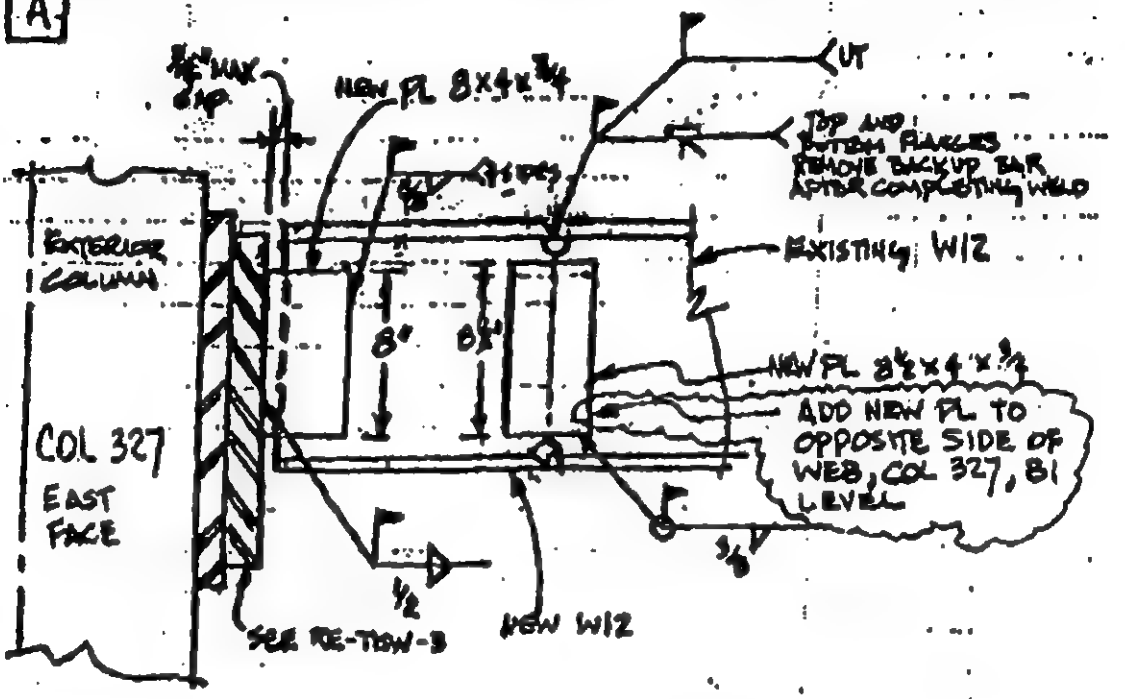

UNLESS OTHERWISE NOTED, ALL PLATE MATERIAL SHALL BE A-36, ALL WELDING ELECTRODES SHALL BE E7018.

SEE RE-T1SW-5.1 FOR PLAN

ONFIDENTIAL

REV.	LERA LESLIE E. ROBERTSON ASSOCIATES CONSULTING STRUCTURAL ENGINEERS	P 1003118	DRAWING NO.
	WTC - RECONSTRUCTION	DRAFT WPM	RE-TISW 5-2.2
	1 WTC - BEAM REPAIR DETAILS	DESIGN WPM	
		CHECK	8.17.93

B | C

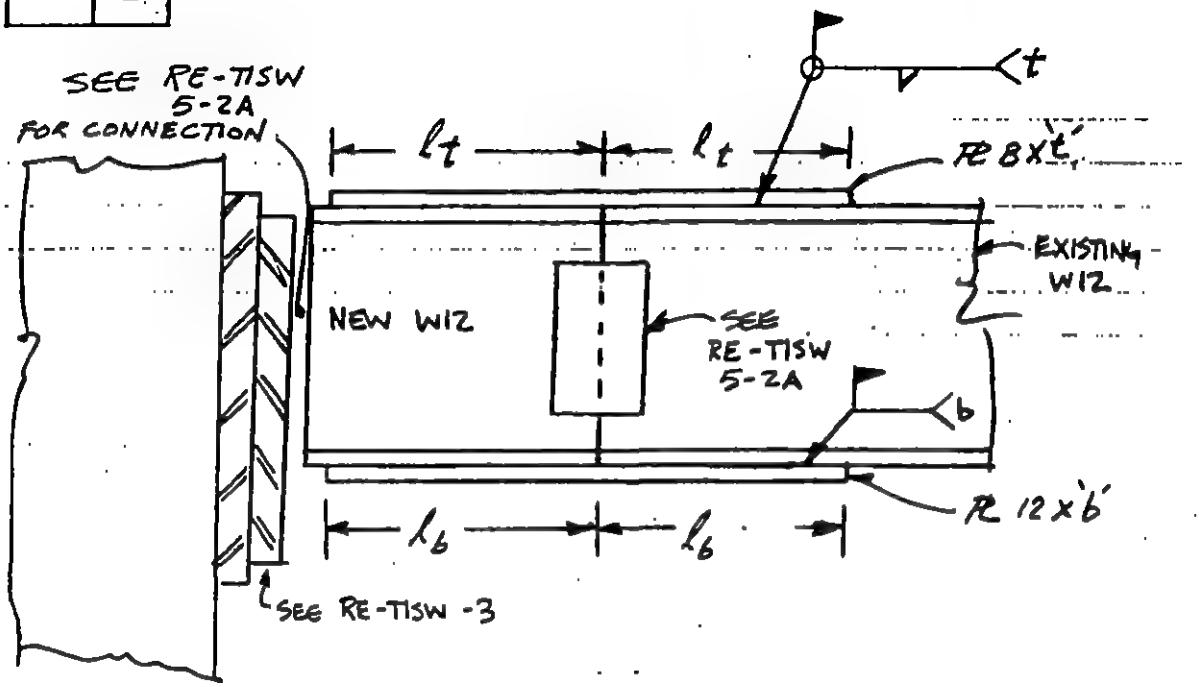

DETAIL	l_t	l_b	WELD t	WELD b	PLATE THICKNESS 't'	PLATE THICKNESS 'b'
B	10"	10"	3/8	7/16	3/4"	1/2"
C	7"	13"	5/8	1/2	1"	3/4"

ALL PLATE MATERIAL SHALL BE A-36, ALL WELDING ELECTRODES SHALL BE E7018.

REV.	LERA LESLIE E. ROBERTSON ASSOCIATES CONSULTING STRUCTURAL ENGINEERS	P 1003118	DRAWING NO.
2 JUN 94	WTC EXPLOSION	DRAFT	RE-T1-SW 2-4·1
	REPAIR OF COL 324A	DESIGN RMP	
	SOUTH VIEW ⊃ NORTH VIEW SIMILAR	CHECK WJF	20th May 94

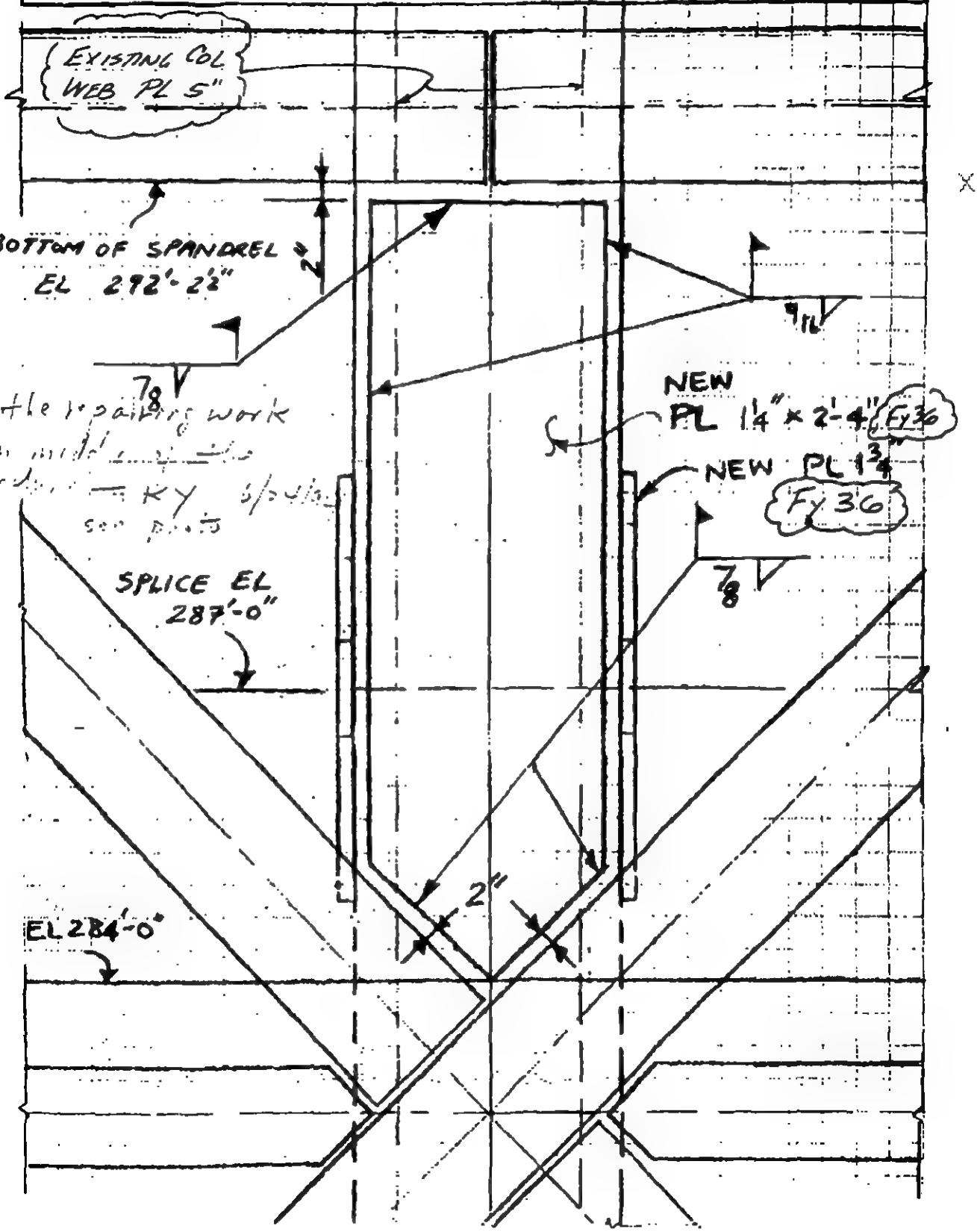

REV.	LERA LESLIE E. ROBERTSON ASSOCIATES CONSULTING STRUCTURAL ENGINEERS	P 1003118	DRAWING NO.
	WTC EXPLOSION	DRAFT	RE-T1-SW 2-4-1
	REPAIR OF COL 324A	DESIGN RMP	
	SOUTH VIEW ⊃ NORTH VIEW SIMILAR	CHECK WJF	20th May 94

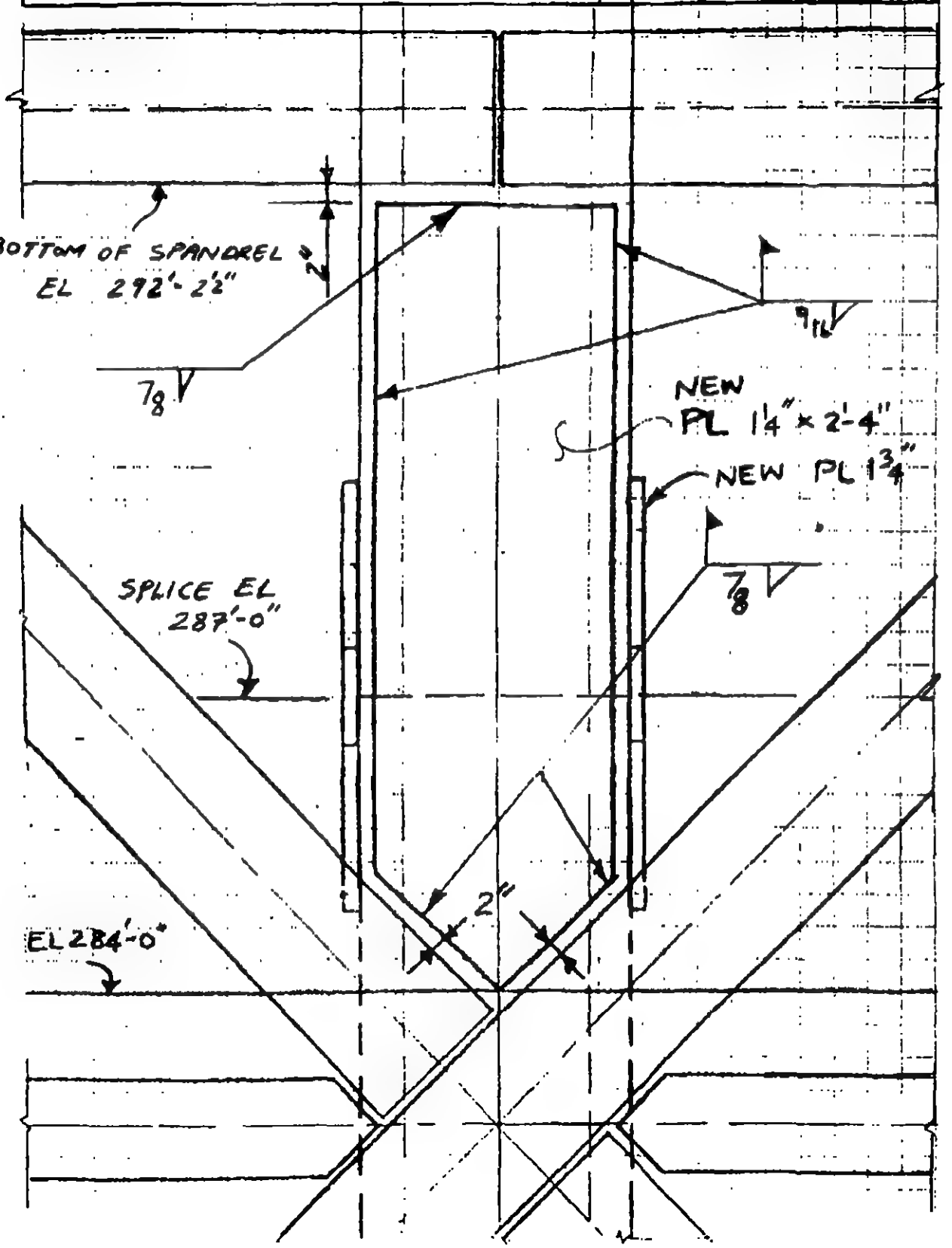

REV.	LERA LESLIE E. ROBERTSON ASSOCIATES CONSULTING STRUCTURAL ENGINEERS	P 1003118	DRAWING NO.
2 JUN 94	WTC EXPOSION	DRAFT	RE-T1-SW
	REPAIR OF COL 324A	DESIGN RMP	2-4-2
	EAST VIEW, WESTVIEW SIMILAR	CHECK WJF	20th May 94

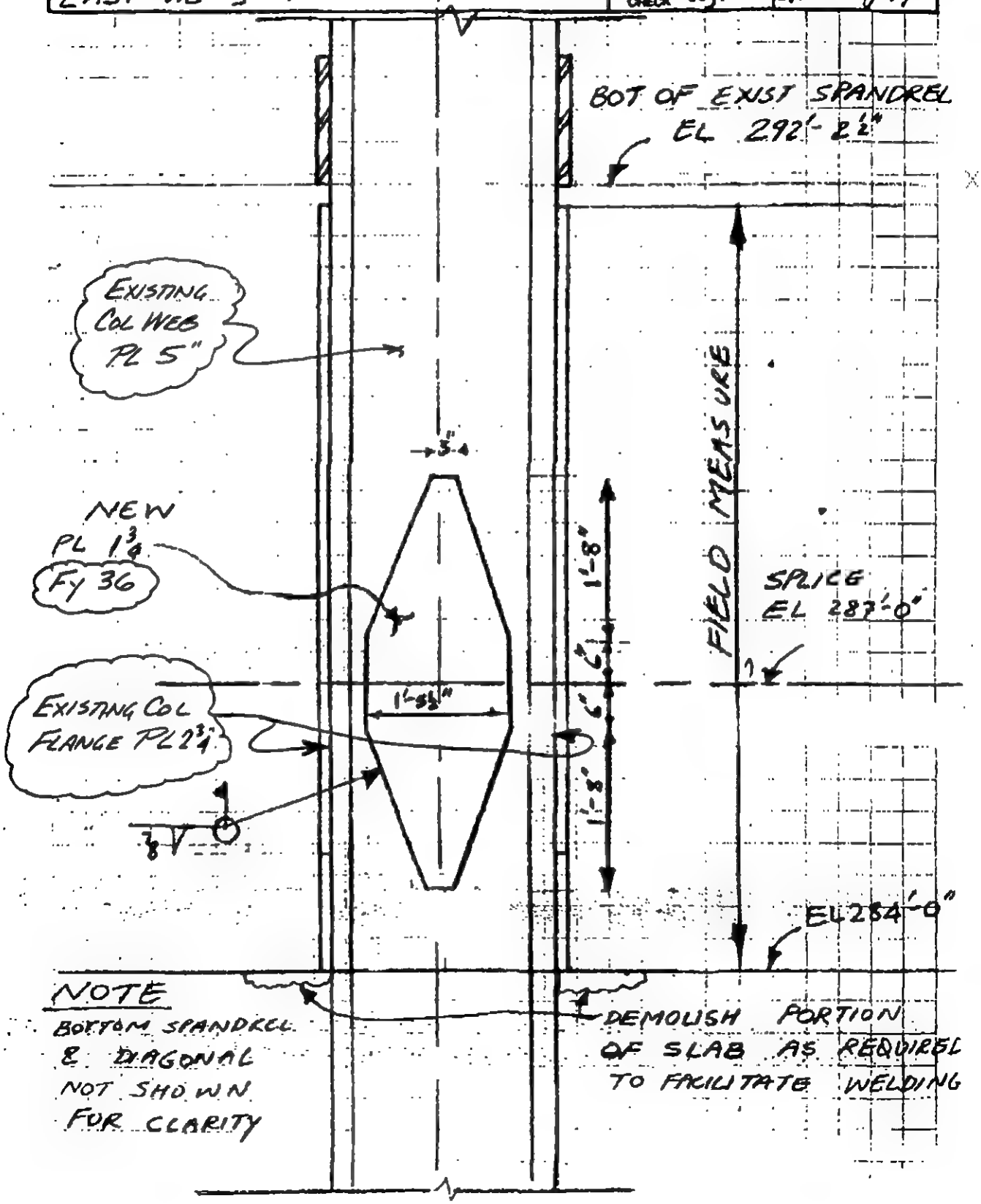

REV.	LERA LESLIE E. ROBERTSON ASSOCIATES CONSULTING STRUCTURAL ENGINEERS	P 1003118	DRAWING NO.
	WTC EXPOSION	DRAFT	RE-T1-SW
	REPAIR OF COL 324A	DESIGN KMP	2-4-2
	EAST VIEW, WESTVIEW SIMILAR	CHECK WJF	20th May 94

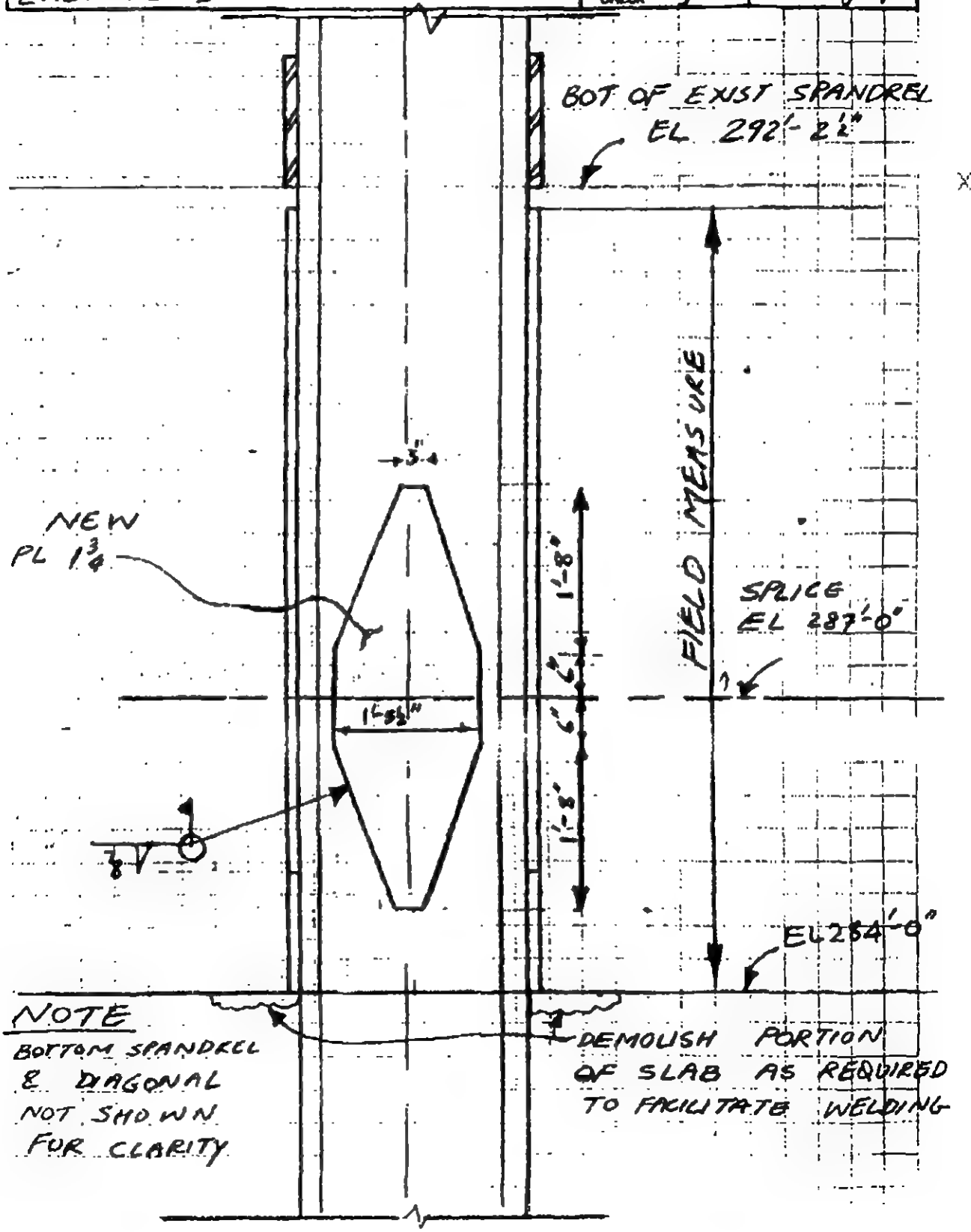

REV.	LERA LESLIE E. ROBERTSON ASSOCIATES CONSULTING STRUCTURAL ENGINEERS	P 100	DRAWING NO.
	WTC - EXPLOSION	DRAFT AMA	SH - SK - 1
	SHORING ELEVATION	DESIGN	
		CHECK	6 MAR 93

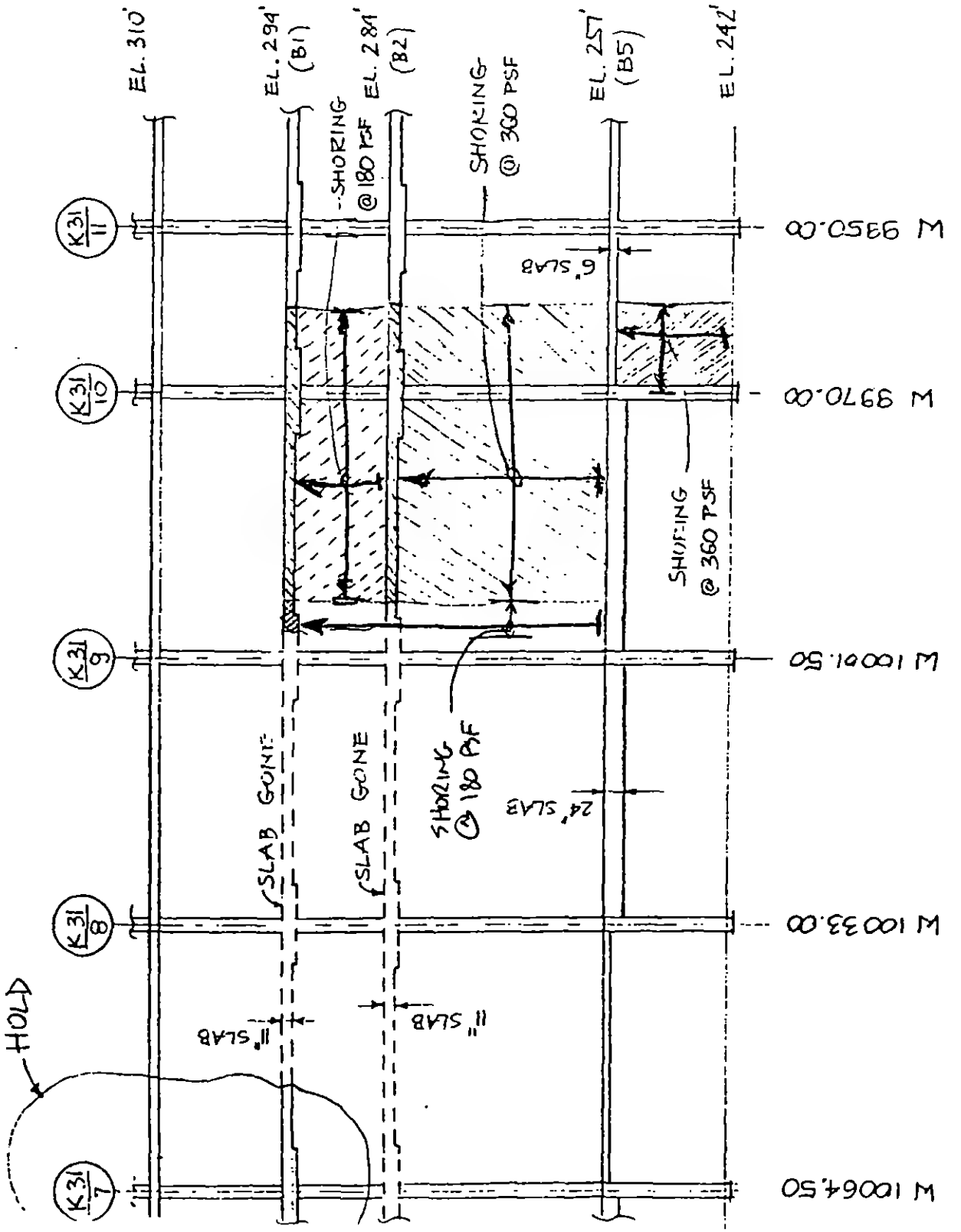

CONFIDENTIAL

EXP 003798

REV.	LERA LESLIE E. ROBERTSON ASSOCIATES CONSULTING STRUCTURAL ENGINEERS	P 100	DRAWING NO.
	WTC - EXPLOSION	DRAFT AMA	SH-SK-2
	SHORING ELEVATION	DESIGN	
		CHECK	6 MAR 93

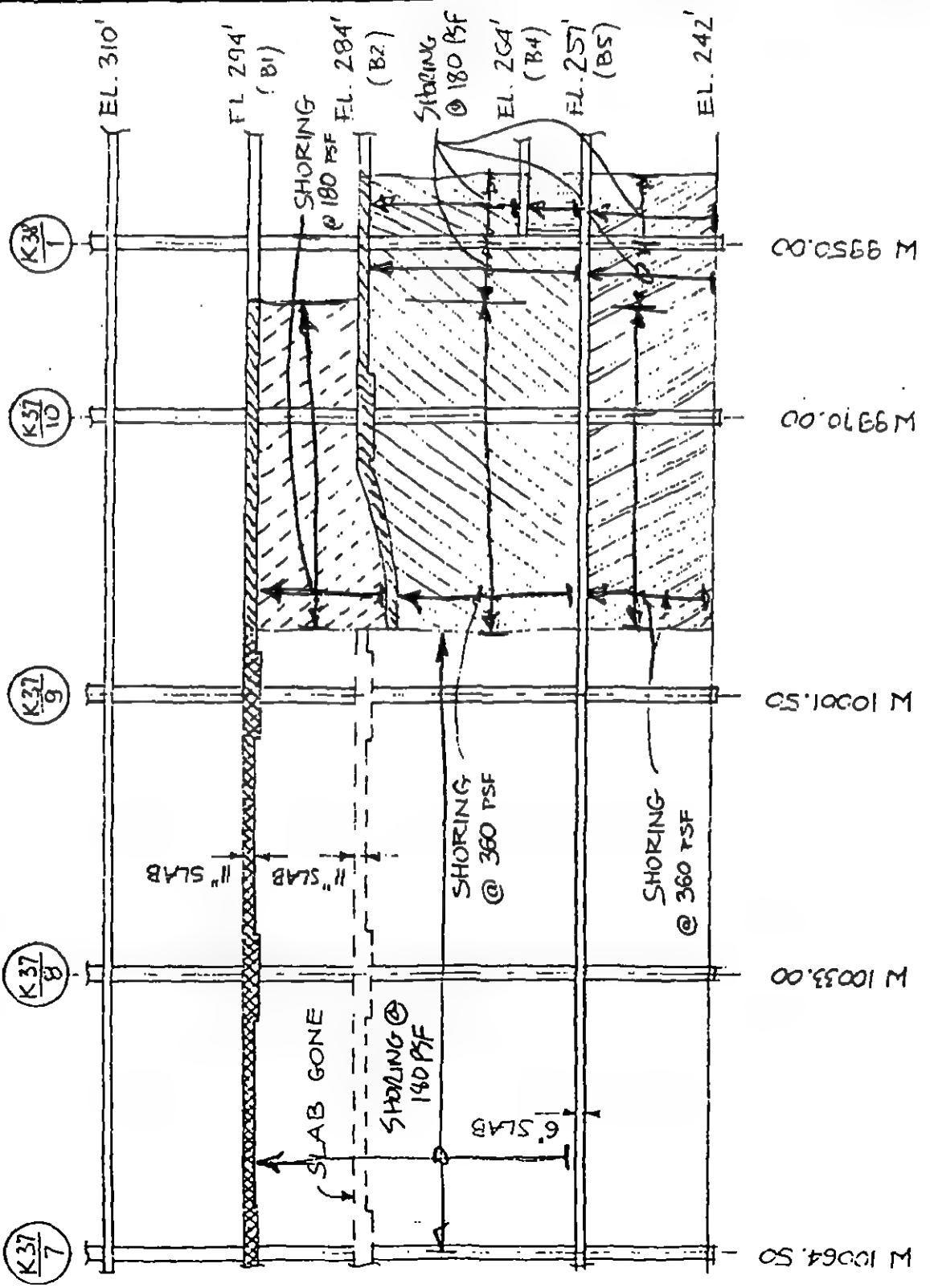

CONFIDENTIAL

EXP 003799

REV.	LERA LESLIE E. ROBERTSON ASSOCIATES CONSULTING STRUCTURAL ENGINEERS	P	DRAWING NO.
	WTC EXPLOSION	DRAFT	SH-SK-3
	SHORING ELEVATION	DESIGN PAA	
		CHECK	7MAR93

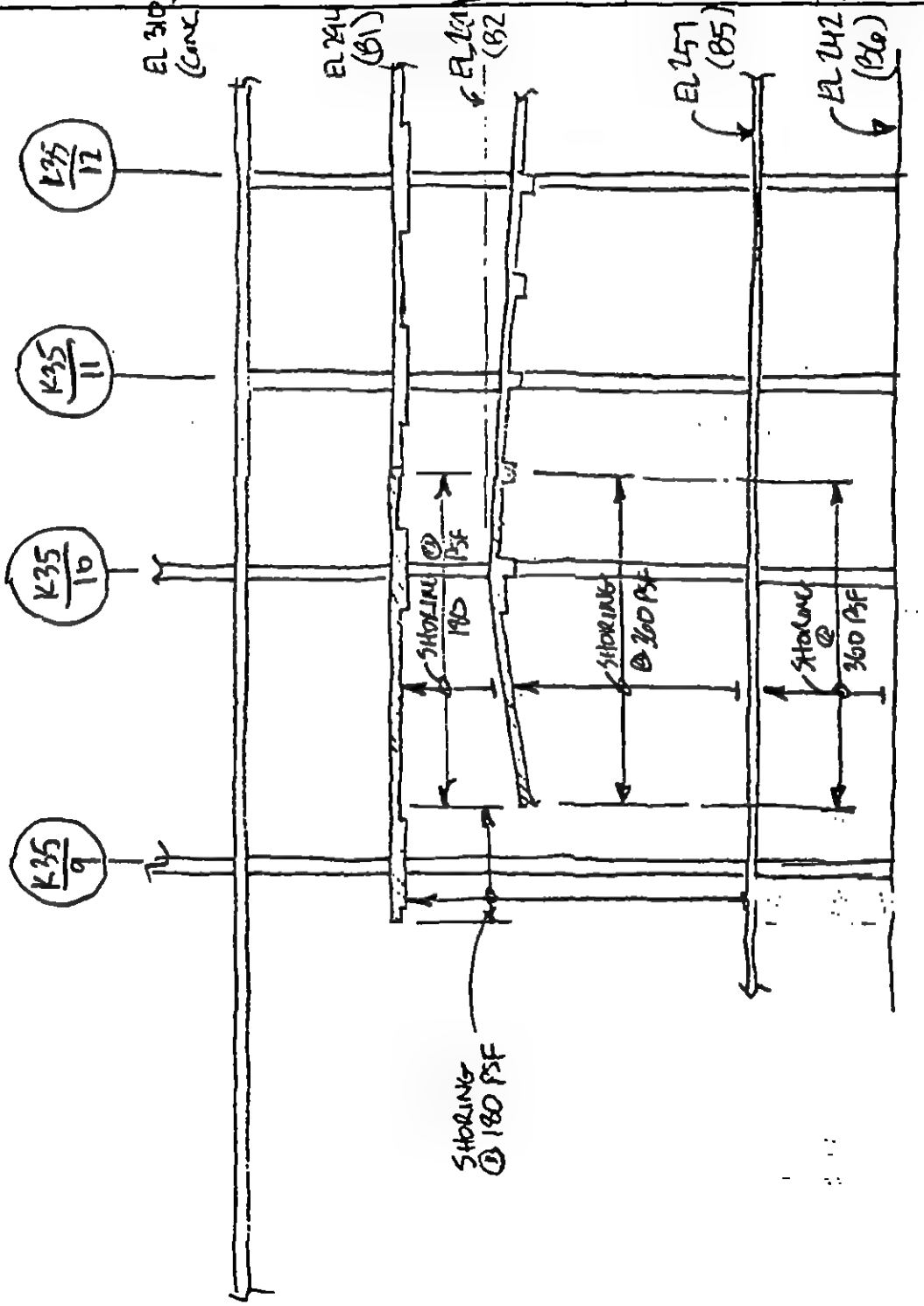

REV.	LERA LESLIE E. ROBERTSON ASSOCIATES CONSULTING STRUCTURAL ENGINEERS	P	DRAWING NO.
	WTC - EXPLOSION	DRAFT PAA	SH-SK-4
	SHORING ELEVATION	DESIGN PAA	
		CHECK	7MAY93

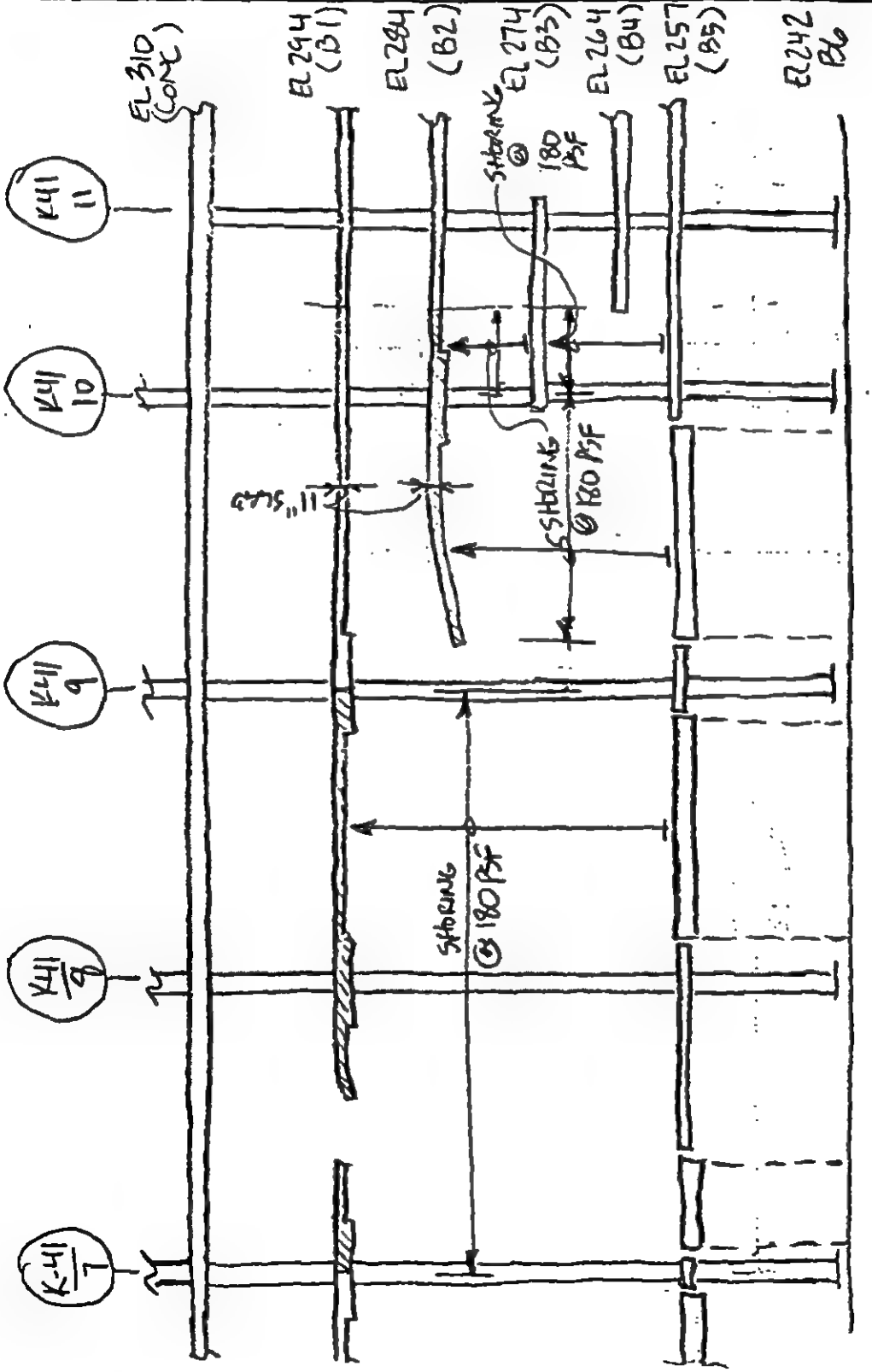

CONFIDENTIAL

EXP 003801

REV.	LERA LESLIE E. ROBERTSON ASSOCIATES CONSULTING STRUCTURAL ENGINEERS	P 100	DRAWING NO.
	WTC - EXPLOSION	DRAFT FTR	SH - SK-5
	SHORING ELEVATION	DESIGN	
		CHECK	7 MAR. 92

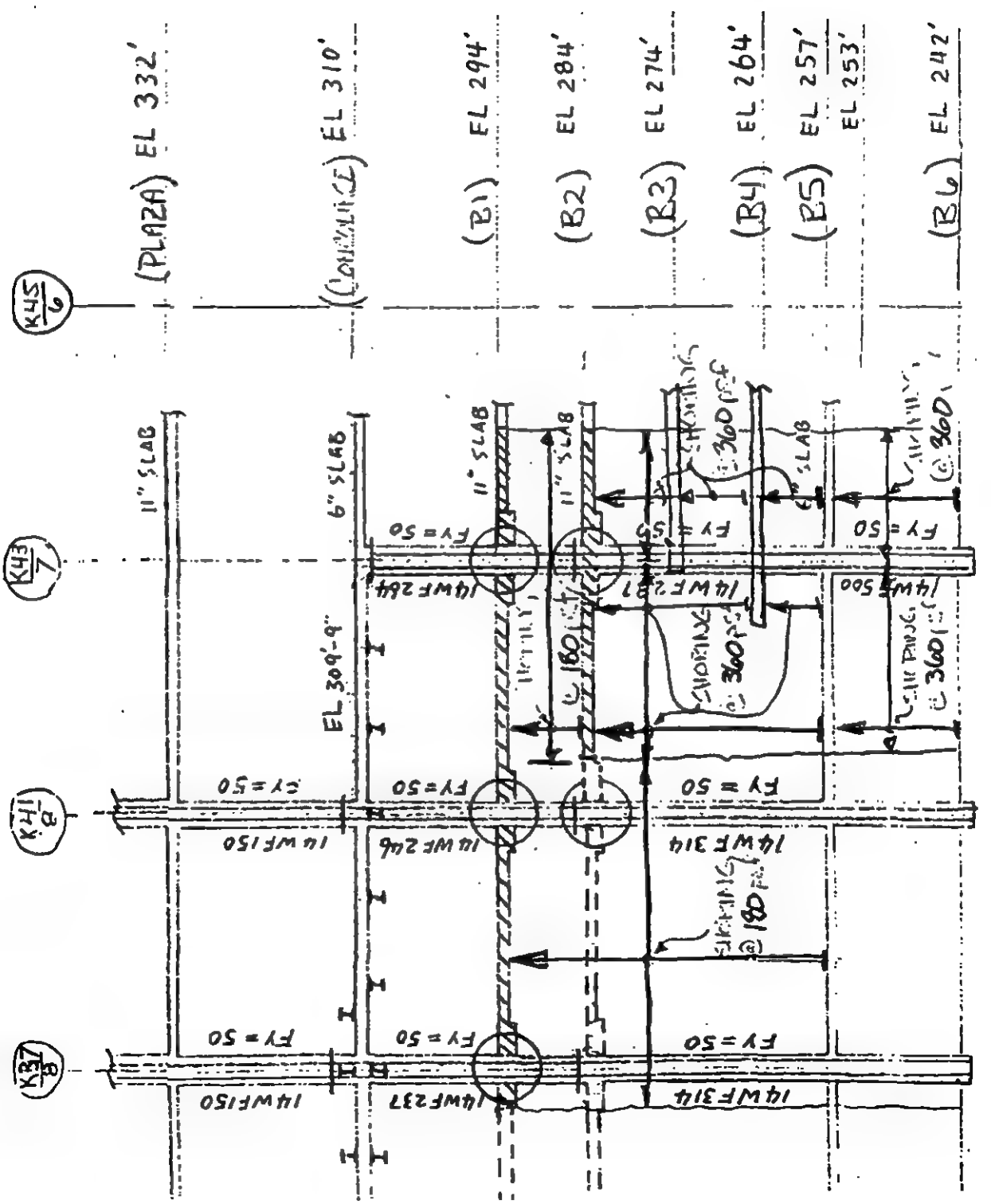

REV.	LERA LESLIE E. ROBERTSON ASSOCIATES CONSULTING STRUCTURAL ENGINEERS	P 100	DRAWING NO.
	100TC - EXPLOSION	DRAFT PTP	SH-SK-61
	SHORING CLEARANCE	DESIGN	
		CHECK	7 MAR 92

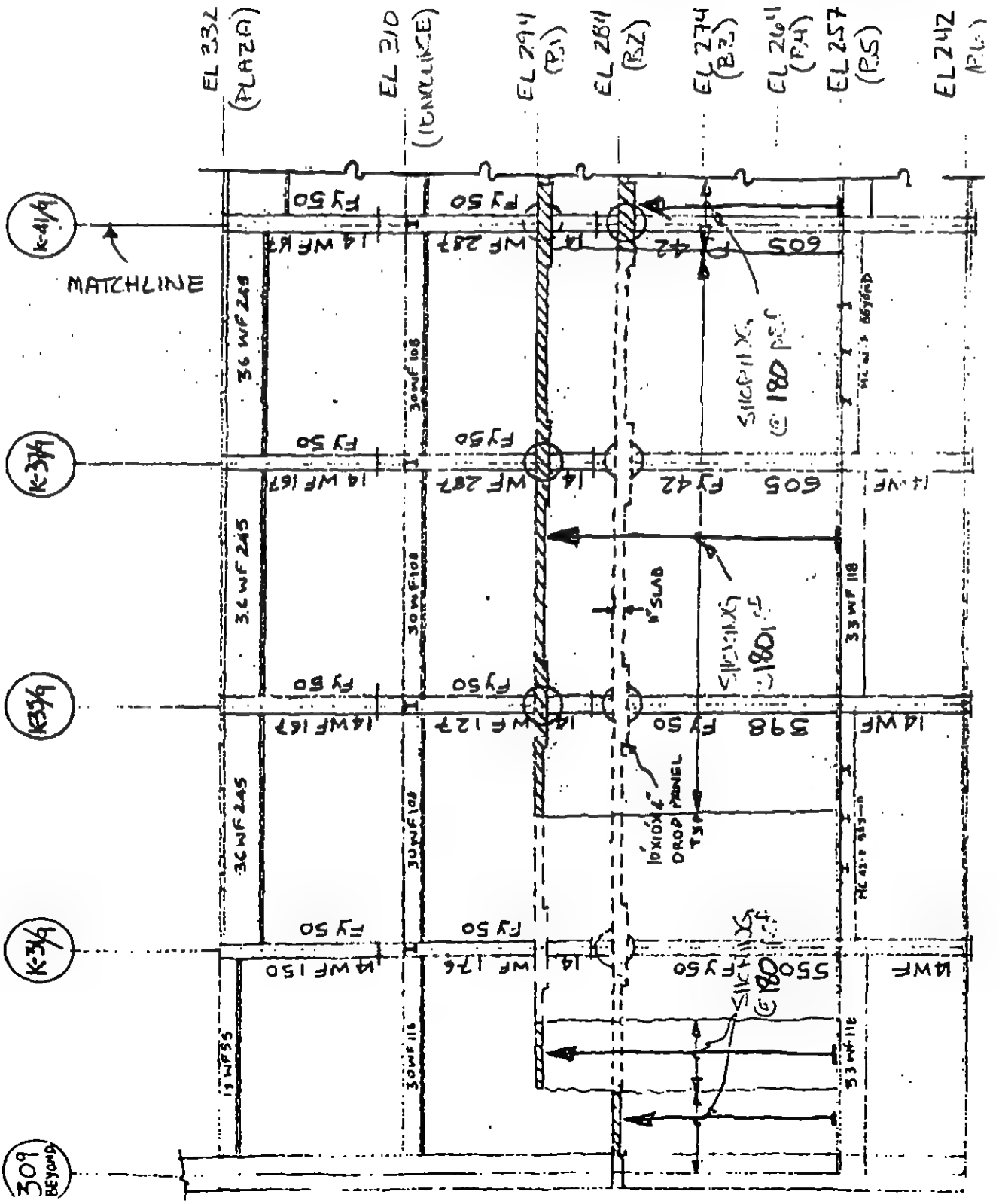

CONFIDENTIAL

EXP 003803

REV.	LERA LESLIE E. ROBERTSON ASSOCIATES CONSULTING STRUCTURAL ENGINEERS	P 100	DRAWING NO.
	LOTC - EXPLOSION	DRAFT	SH-SK-6.2
	SHOWING ELEVATION	DESIGN	
		CHECK	

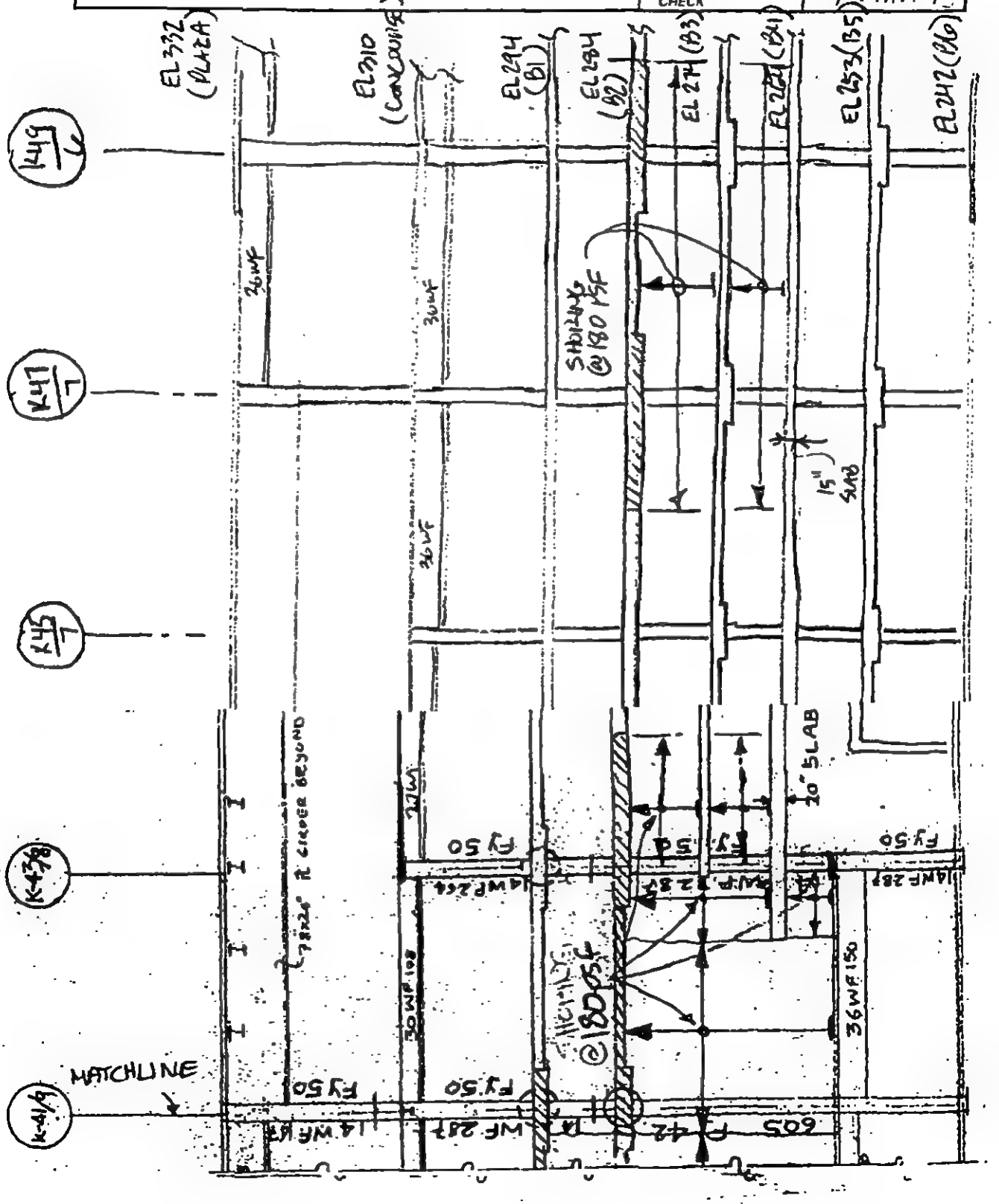

CONFIDENTIAL

EXP 003804

REV.	LERA LESLIE E. ROBERTSON ASSOCIATES CONSULTING STRUCTURAL ENGINEERS	P	DRAWING NO.
	WTC EXPLOSION	DRAFT PAA	SH-SK-7
	SHORING ELEVATION	DESIGN PAA	
		CHECK	7 MAR 93

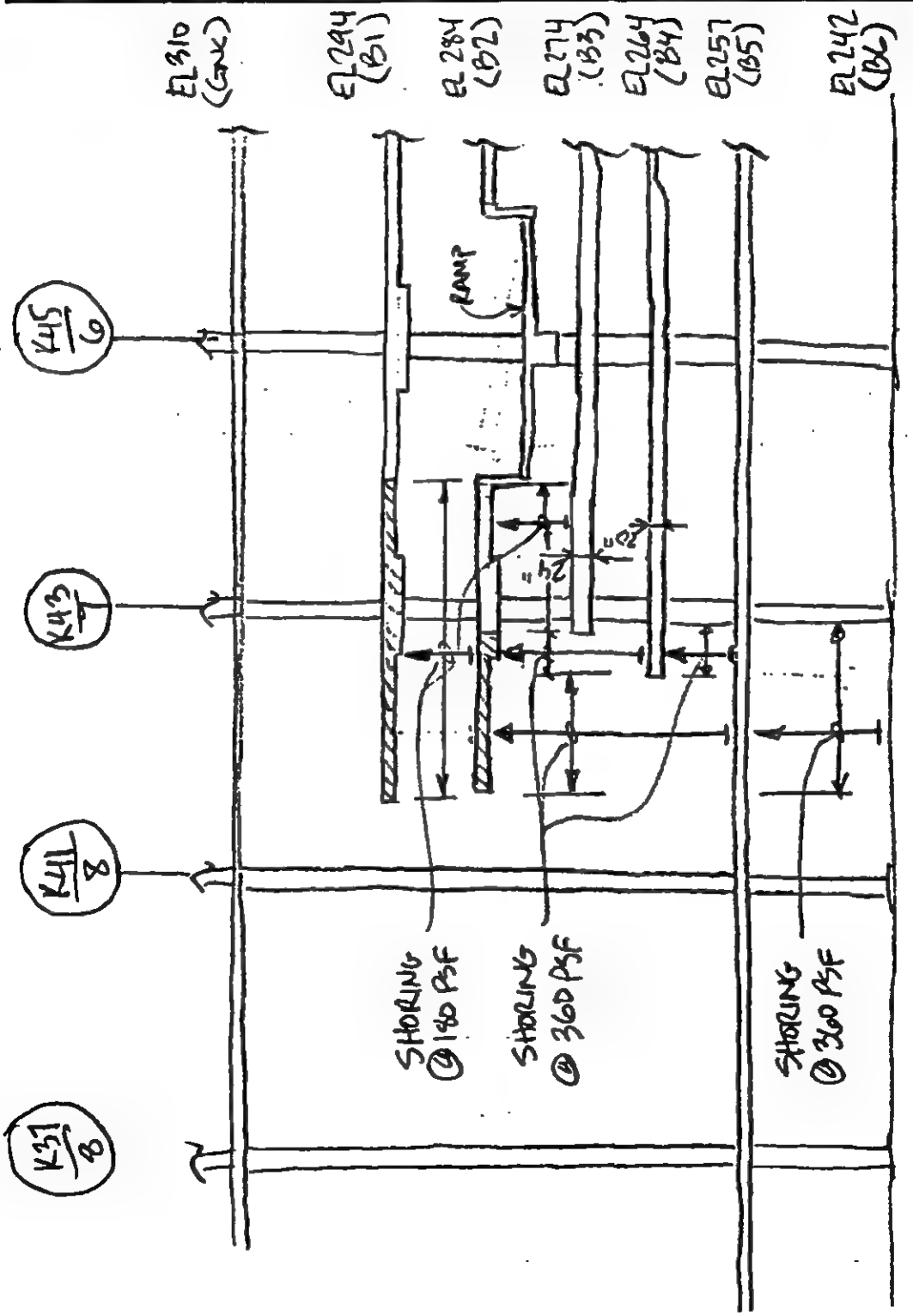

REV.	LERA LESLIE E. ROBERTSON ASSOCIATES CONSULTING STRUCTURAL ENGINEERS	P 1003118	DRAWING NO.
	WTC EXPLOSION	DRAFT	SH-SK-8
	B2 DEMOLITION @ k-57/1 & k-61/2	DESIGN RMP	
		CHECK	22 June 98

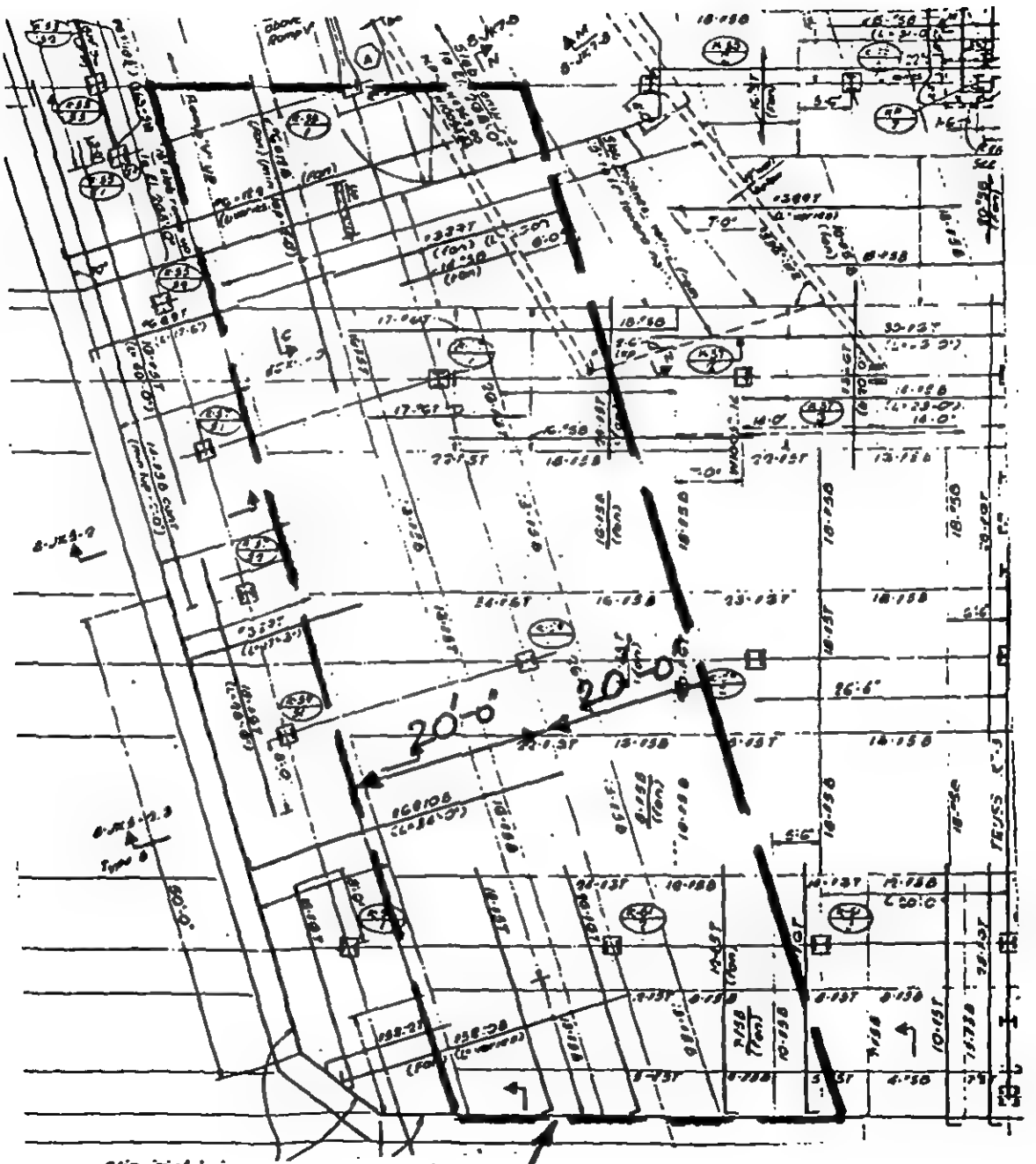

CLEAR THIS AREA OF ANY STORAGE . . LOADING . . @ B2, B3 & B4 LEVELS BEFORE DEMOLISHING B2 SLAB @ COL k-57/1 & COL k-61

CONFIDENTIAL

EXP 003806

REV.	LERA LESLIE E. ROBERTSON ASSOCIATES CONSULTING STRUCTURAL ENGINEERS	P 1003118	DRAWING NO.
	WTC EXPLOSION	DRAFT	SH-SK-9.1
	B2 - SHORING PLAN & UTILITY REMOVAL (NOT FOR DEMOLITION)	DESIGN RMP	
		CHECK	12 June 93

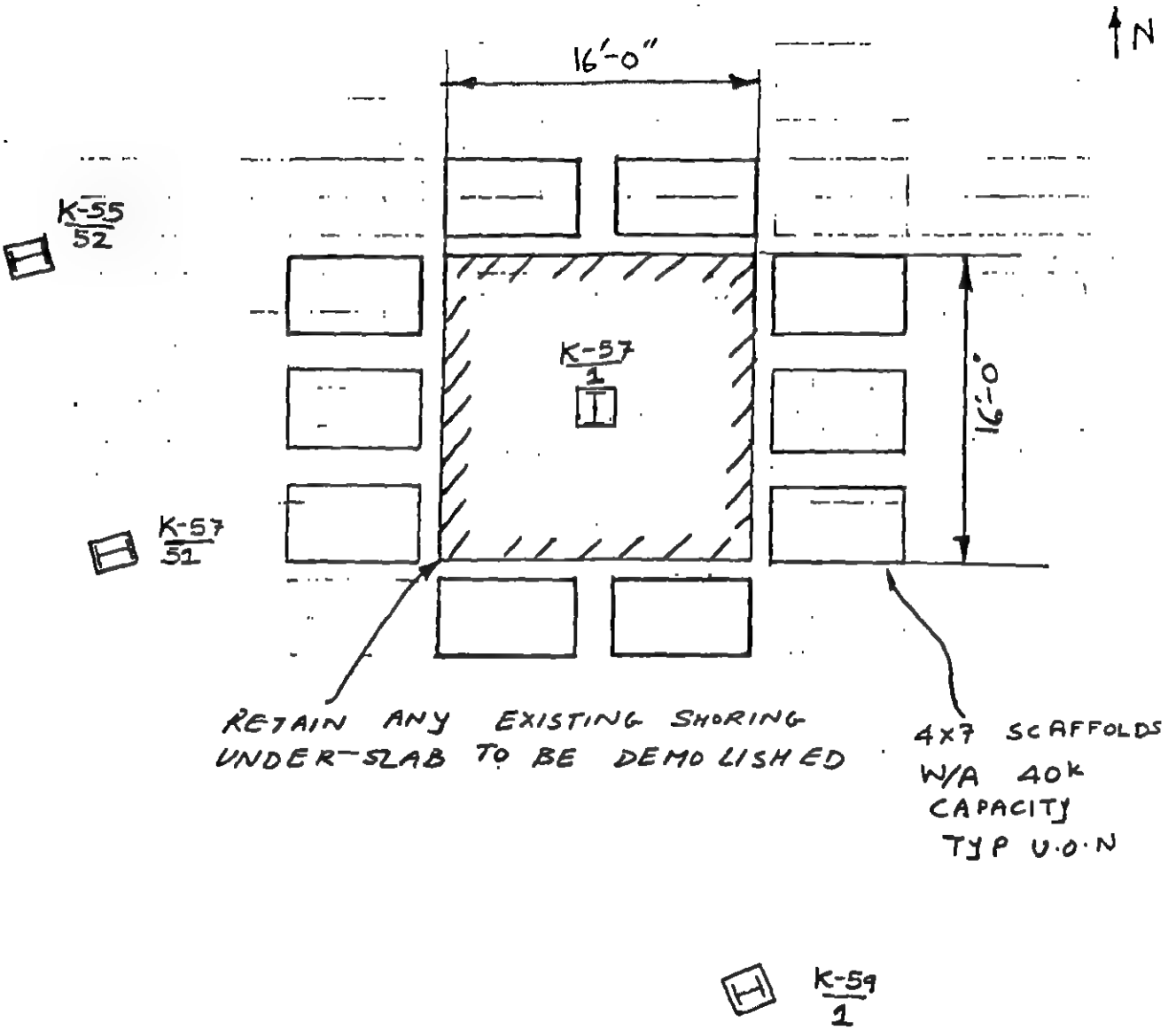

PART PLAN - B.3 LEVEL

CONFIDENTIAL

EXP 003807

REV.	LERA LESLIE E. ROBERTSON ASSOCIATES CONSULTING STRUCTURAL ENGINEERS	P 1003118	DRAWING NO.
	WTC EXPLOSION	DRAFT	
	B2- SHORING (NOT FOR DEMOLITION)	DESIGN RMP	SH-SK-9.2
		CHECK	22 June 93

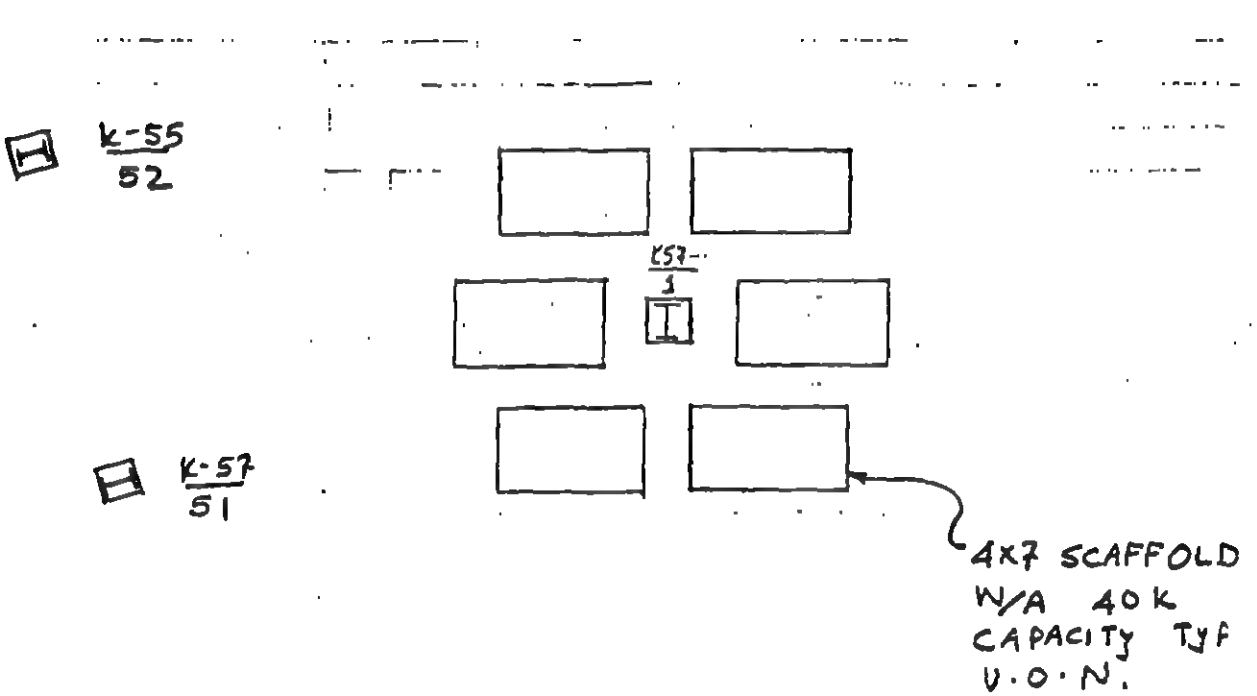

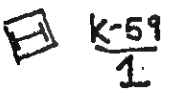

PART PLAN - B4 LEVEL

CONFIDENTIAL

EXP 003808

REV.	LERA LESLIE E. ROBERTSON ASSOCIATES CONSULTING STRUCTURAL ENGINEERS	P 1003118	DRAWING NO.
	WTC EXPLOSION	DRAFT	
	B2-SHORING PLAN & UTILITY REMOVAL	DESIGN RMP	SH-SK-10.1
	(NOT FOR DEMOLITION)	CHECK	22 June 93

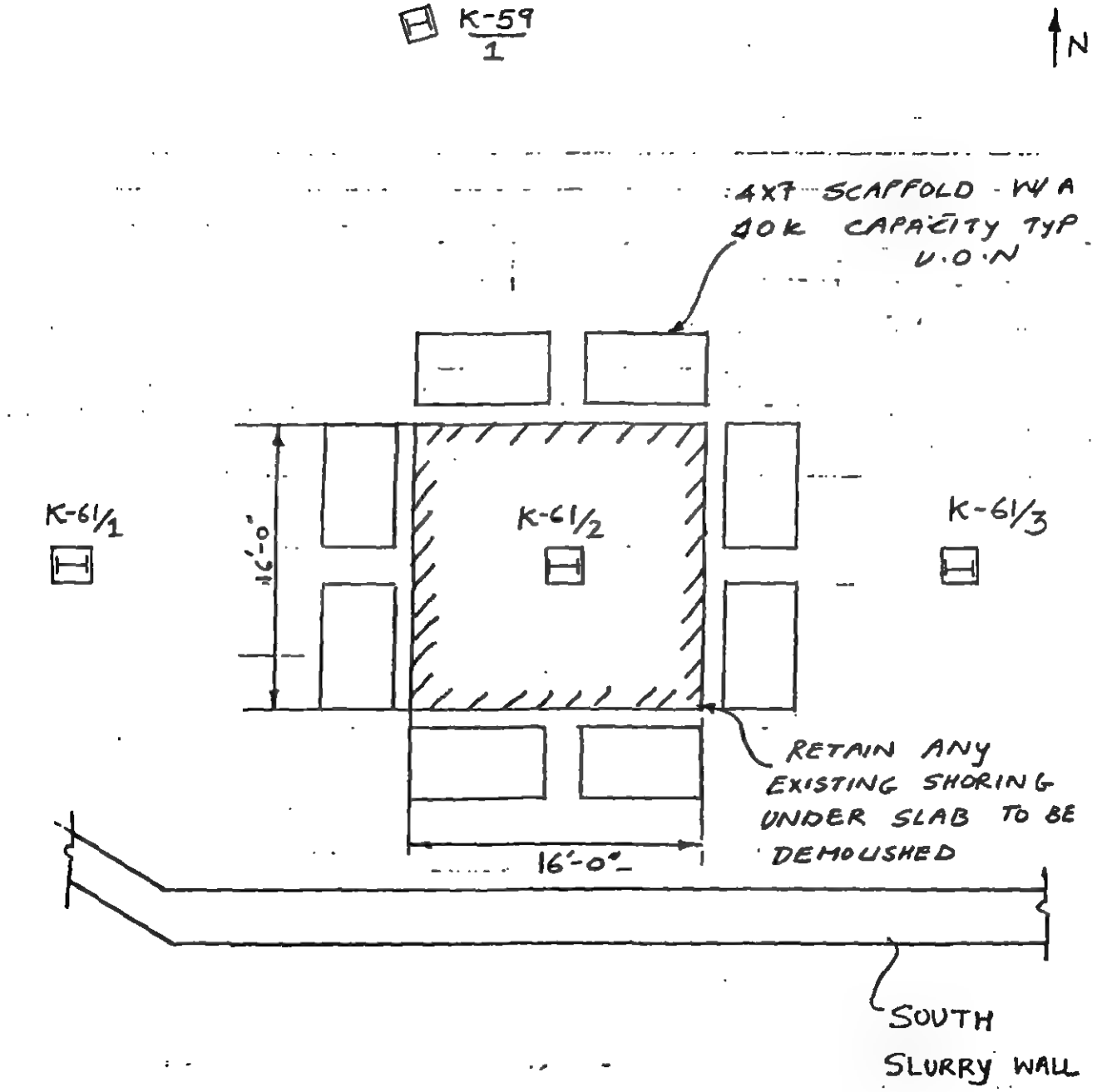

PART PLAN – B3 LEVEL

CONFIDENTIAL

EXP 003809

REV.	LERA LESLIE E. ROBERTSON ASSOCIATES CONSULTING STRUCTURAL ENGINEERS	P 1003118	DRAWING NO.
	WTC EXPLOSION	DRAFT	
	B2- SHORING PLAN	DESIGN RMP	SH-SK-10.2
	(NOT FOR DEMOLITION)	CHECK	22 June 93

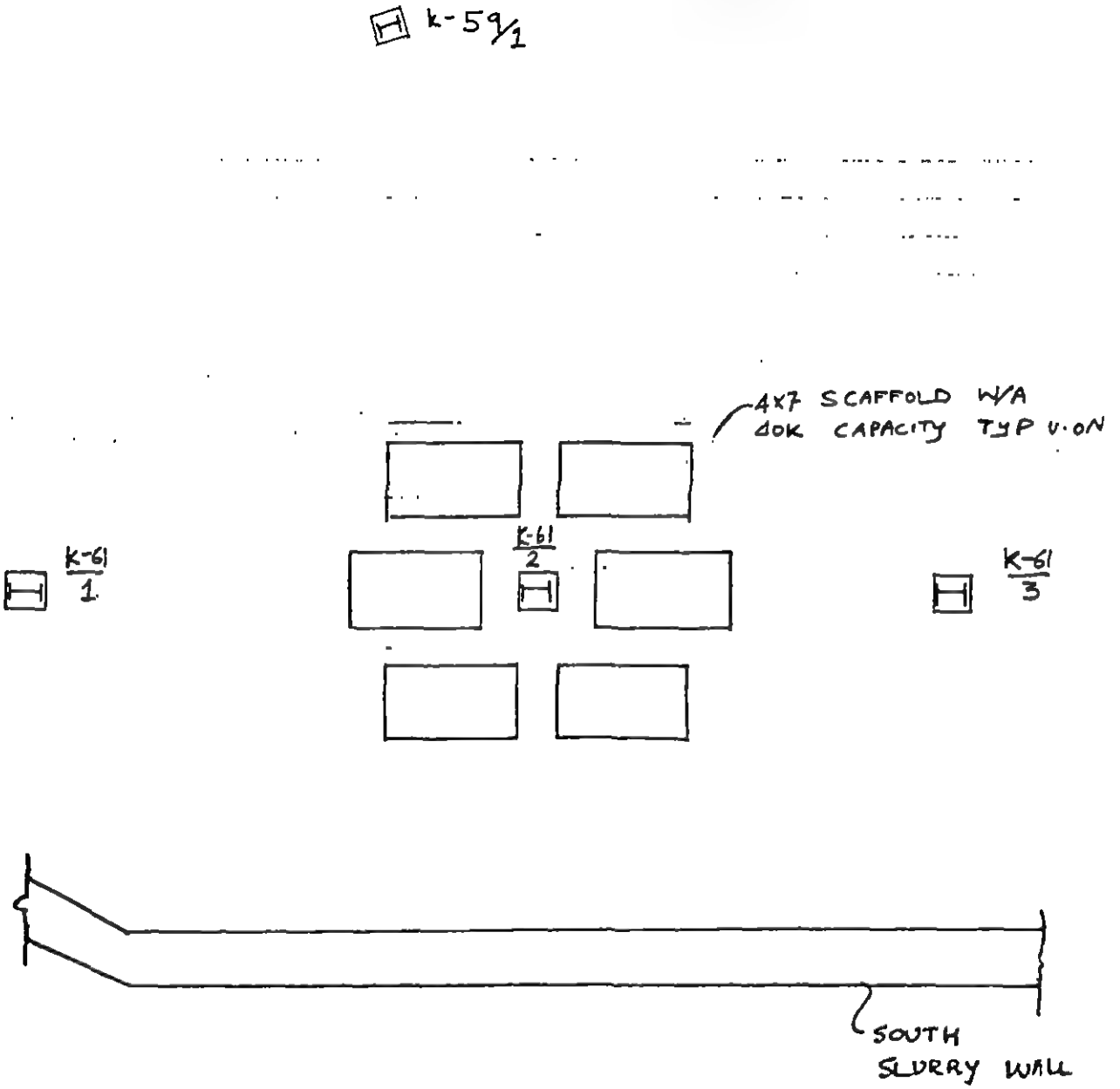

PART PLAN - B4 LEVEL

REV.	LERA LESLIE E. ROBERTSON ASSOCIATES CONSULTING STRUCTURAL ENGINEERS	P 1003118	DRAWING NO.
	WTC EXPLOSION	DRAFT RMP	
	B5 - SHORING @ TRANSFER SHAFT #3	DESIGN	SH-SK-11
		CHECK	16th July 93

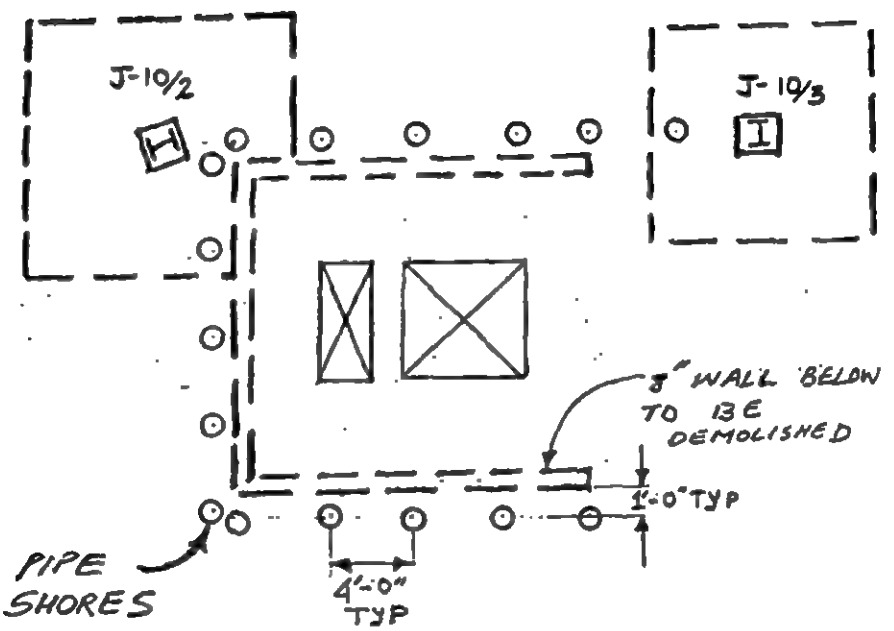

PART PLAN @ EL 253

CONFIDENTIAL

EXP 003811

REV.	LERA LESLIE E. ROBERTSON ASSOCIATES CONSULTING STRUCTURAL ENGINEERS	P /003118	DRAWING NO.
	WTC - RECONSTRUCTION	DRAFT WPM	SH-SK-12.1
	B2 SHORING TO B1 LEVEL - PLAN	DESIGN WPM	
		CHECK	8-3-93

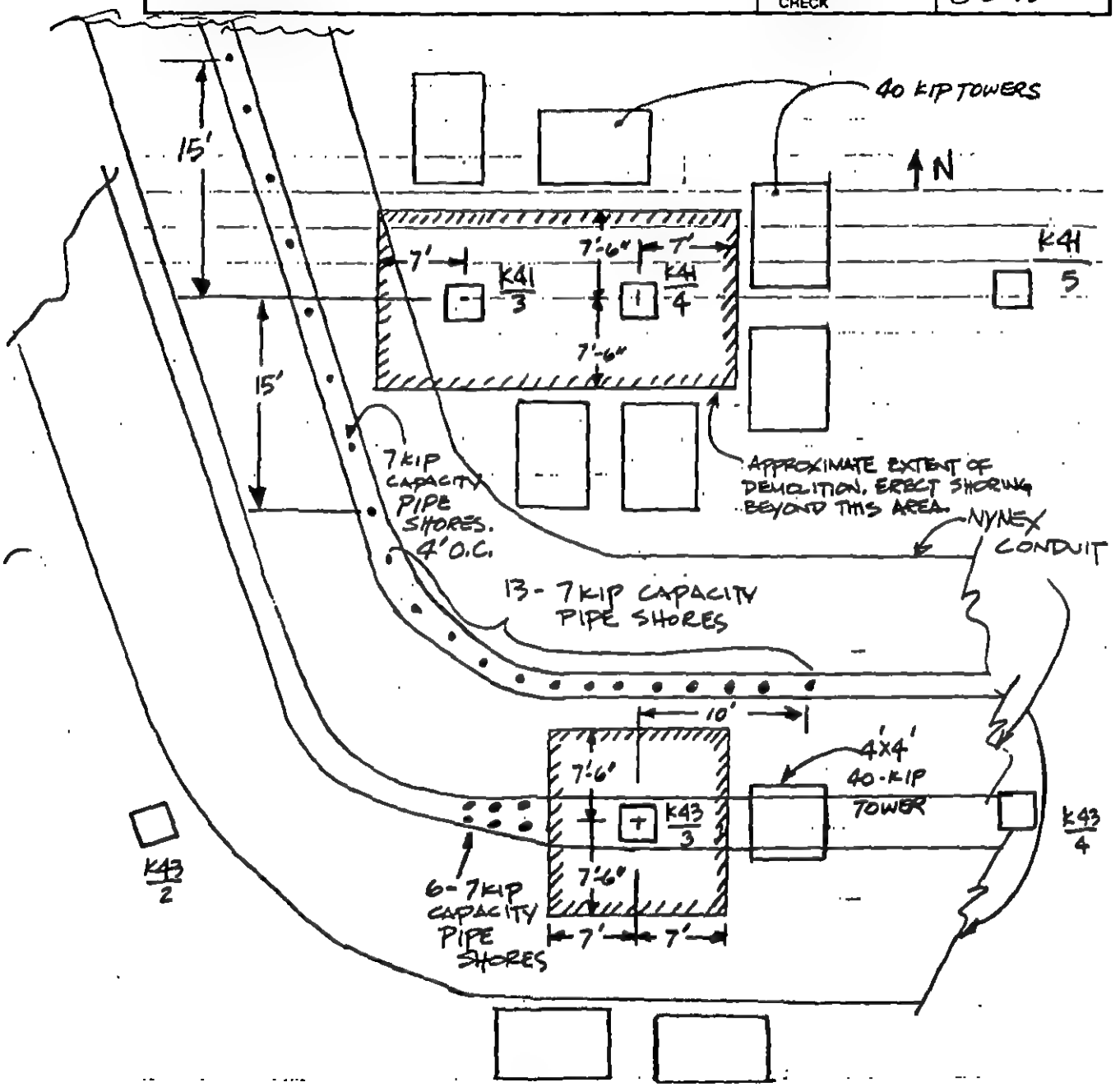

K43/53

NOTES

1. SHORING IDENTIFIED IS TO SUPPORT DEMOLITION OF DROP PANELS INDICATED.
2. DO NOT DEMOLISH DROP PANELS K41/3 AND K41/4 PRIOR TO POUR #3.

CONFIDENTIAL

EXP 003812

REV.	LERA LESLIE E. ROBERTSON ASSOCIATES CONSULTING STRUCTURAL ENGINEERS	P 1003118	DRAWING NO.
	WTC - RECONSTRUCTION	DRAFT WPM	SH - SK-12.2
	B3 SHORING TO B2 - PLAN	DESIGN WPM	
		CHECK	8.3.93

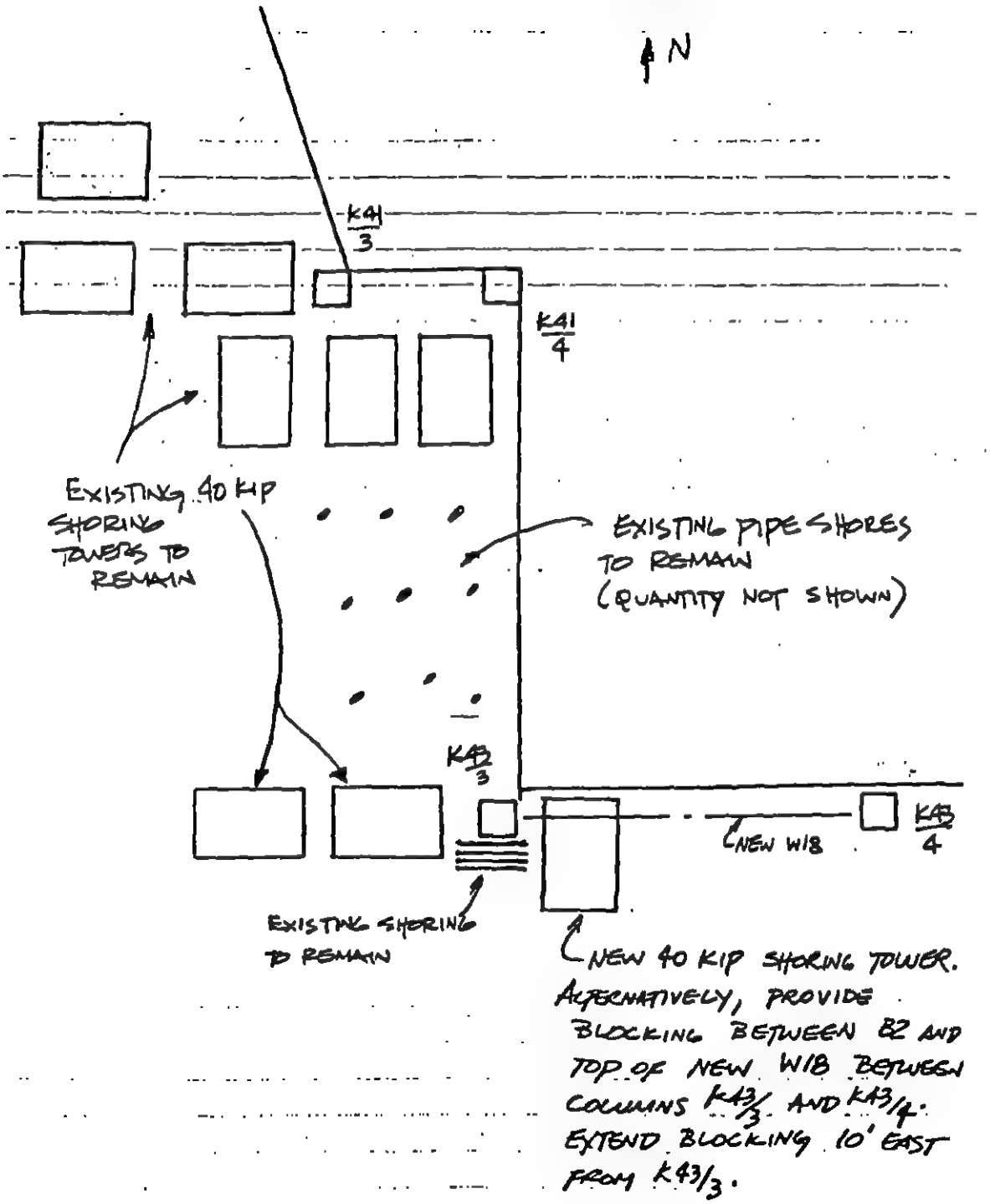

ONFIDENTIAL

REV.	LERA LESLIE E. ROBERTSON ASSOCIATES CONSULTING STRUCTURAL ENGINEERS	P 1003118	DRAWING NO.
	WTC - EXPLOSION	DRAFT	SH-SK-13.1
	SHORING CONCOURSE TO PLAZA (ZONE K-1)	DESIGN CG	
		CHECK	1-SEP-93

GENERAL NOTES:

1. ALL NEW STEEL TO BE F_y = 36 ksi UNLESS OTHERWISE NOTED.

2. IF REQUIRED, HANGER SIZE AND SPACING MAY BE ALTERED TO SUPPORT A UNIFORM, WORKING LOAD OF 2.72 k/ft.

3. TIMBER BLOCKING (4 x 12) SHALL HAVE A MINIMUM ALLOWABLE BENDING STRESS OF F_B = 1050 psi.

REV.	LERA LESLIE E. ROBERTSON ASSOCIATES CONSULTING STRUCTURAL ENGINEERS	P 1003118	DRAWING NO.
	WTC - EXPLOSION	DRAFT	SH-SK-13.2
	PART PLAN - ELEV. 310'-0 (CONCOURSE)	DESIGN CG	
	SHORING PLAN - CONCOURSE TO PLAZA (ZONE K-1)	CHECK	4 SEP 93

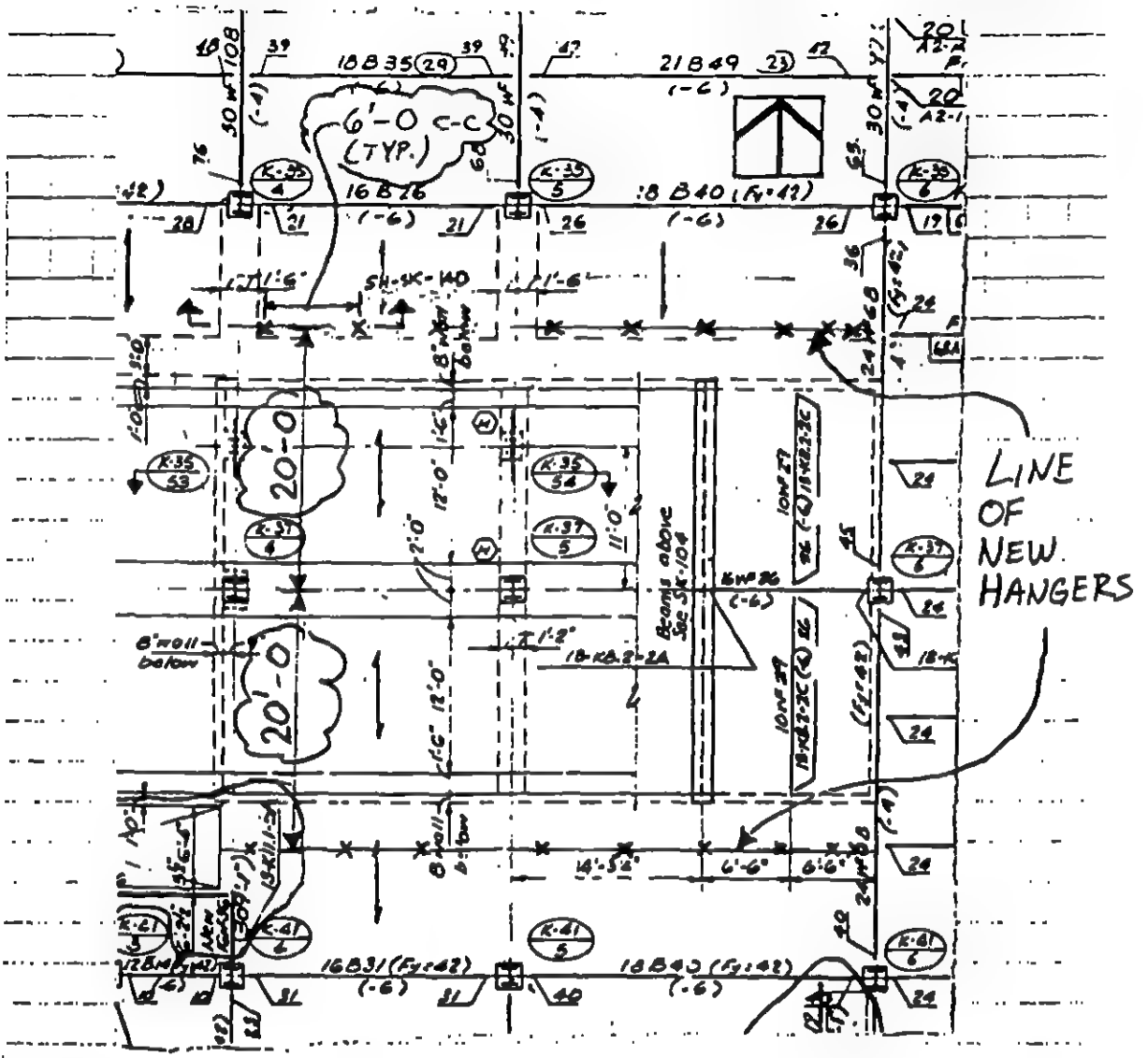

HANGER SPACING (BOTH LINES) @ 310':

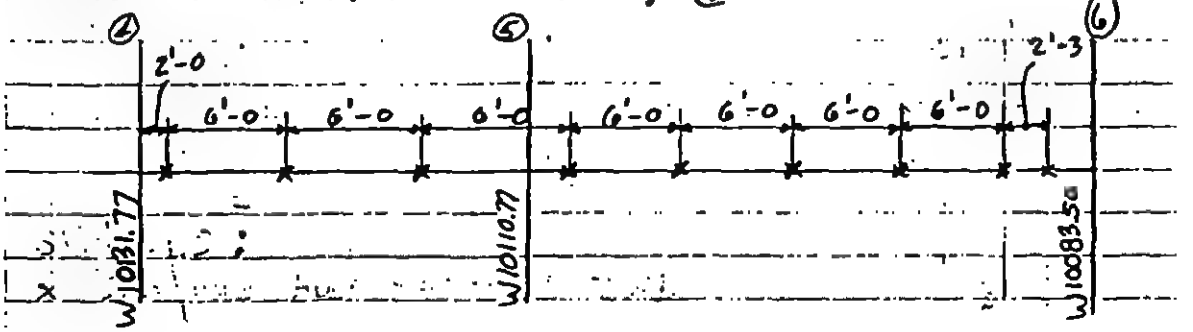

X - INDICATES 1¼" ϕ HOLE THROUGH SLAB.

REV.	LERA LESLIE E. ROBERTSON ASSOCIATES CONSULTING STRUCTURAL ENGINEERS	P 1003118	DRAWING NO.
	WTC - EXPLOSION	DRAFT	SH-SK-13.3
	PART PLAN - ELEV. 332'-0 (PLAZA)	DESIGN CG	
	SHORING PLAN - CONCOURSE TO PLAZA (ZONE K-1)	CHECK	1 SEP 93

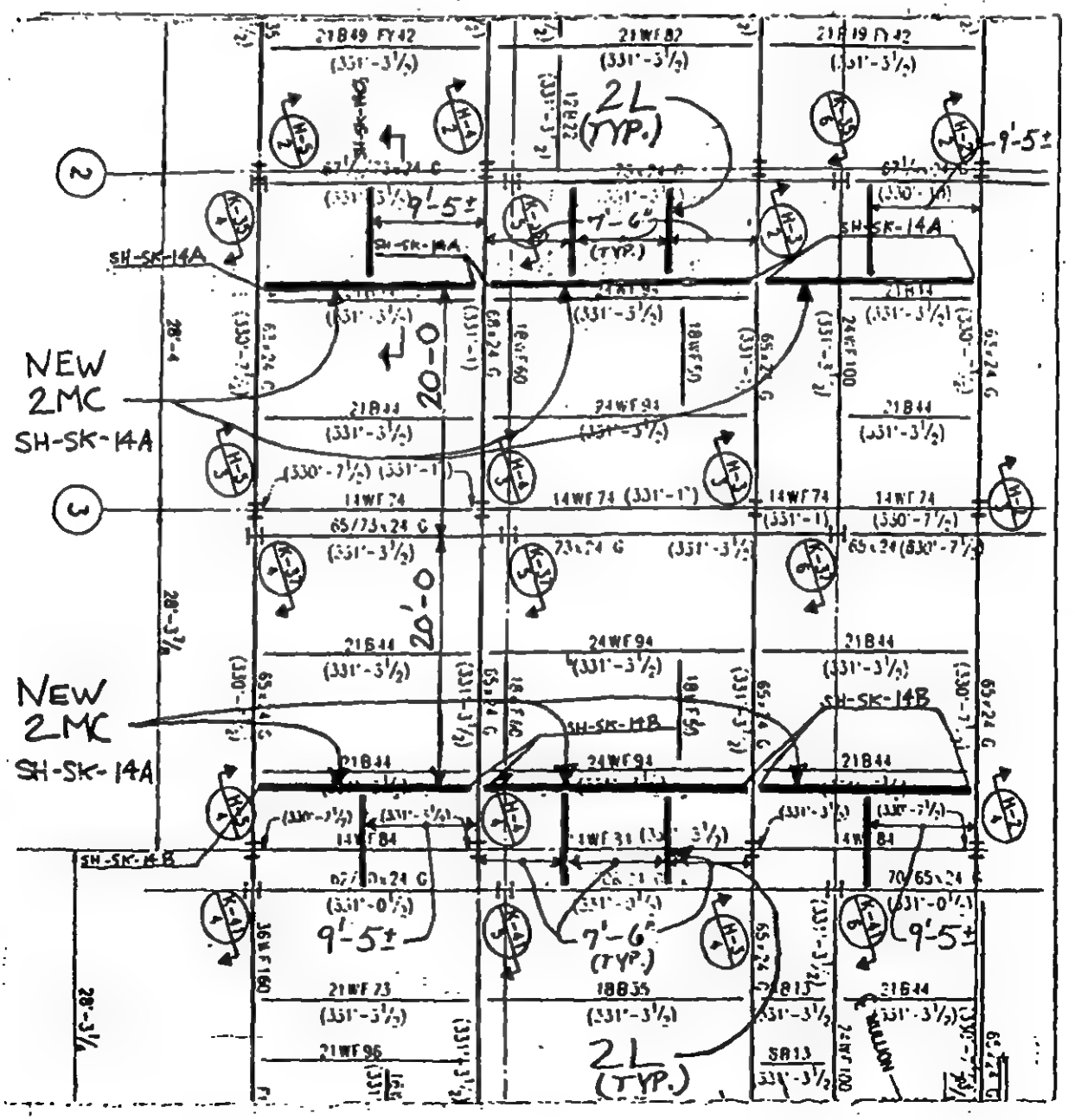

CONFIDENTIAL

EXP 003816

REV.	LERA LESLIE E. ROBERTSON ASSOCIATES CONSULTING STRUCTURAL ENGINEERS	P 1007118	DRAWING NO.
	WTC - EXPLOSION	DRAFT	SH-SK-14.1
	NEW BUILT-UP CHANNEL DETAIL	DESIGN CG	
		CHECK	1 SEP 93

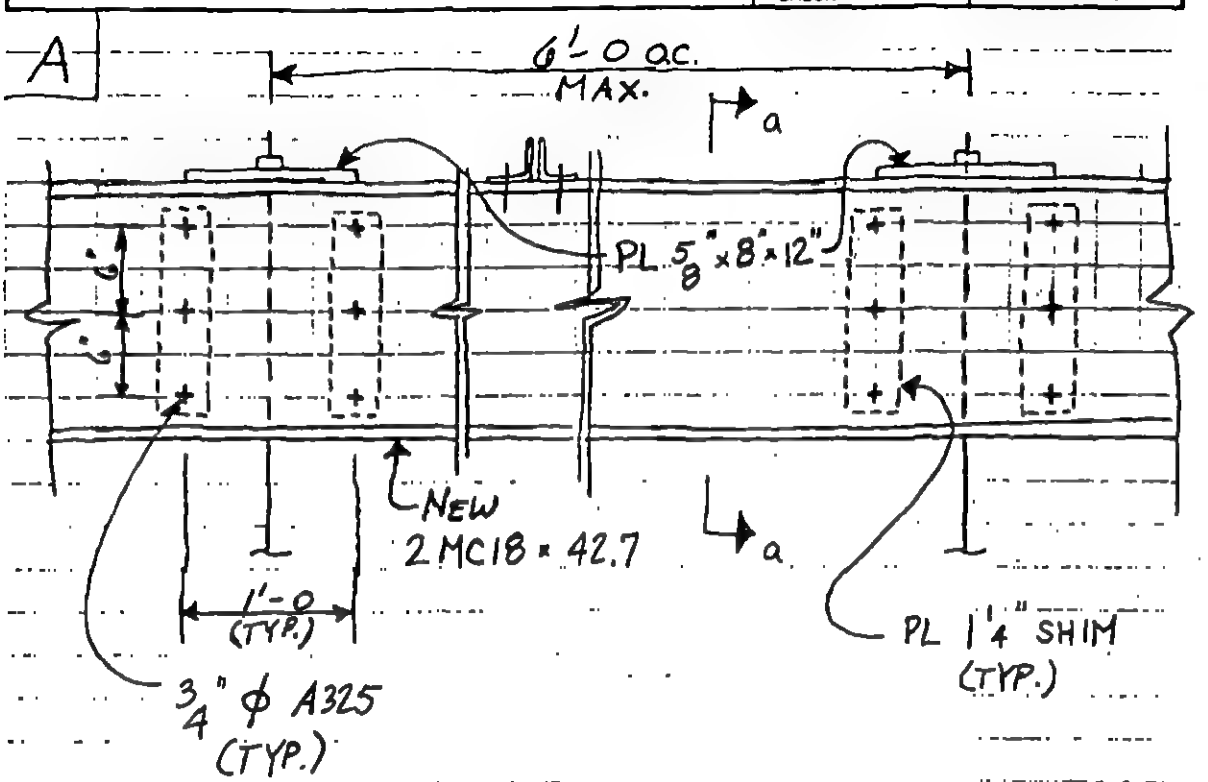

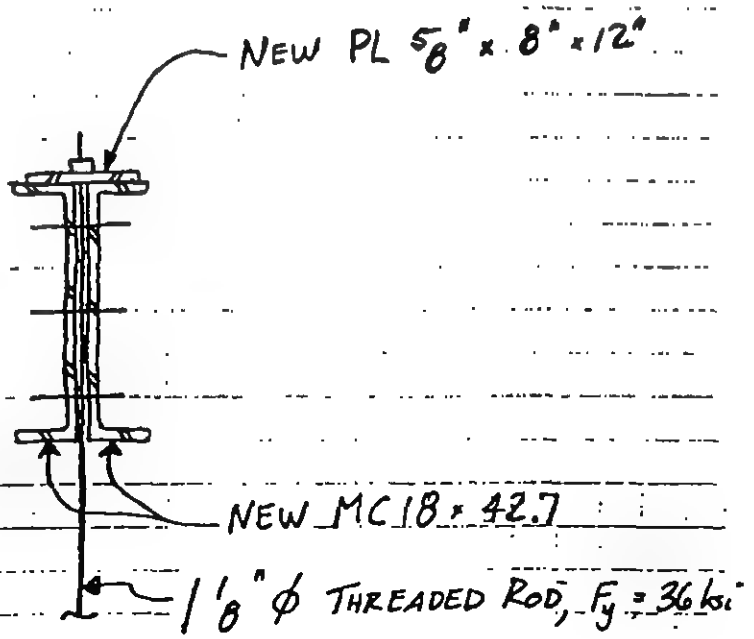

SECTION a - a

REV.	LERA LESLIE E. ROBERTSON ASSOCIATES CONSULTING STRUCTURAL ENGINEERS	P 1003118	DRAWING NO.
	WTC - EXPLOSION	DRAFT	SH-SK-14.2
	TYPICAL CHANNEL TO GIRDER CONNECTION	DESIGN CG	
		CHECK	1 SEP.93

A B

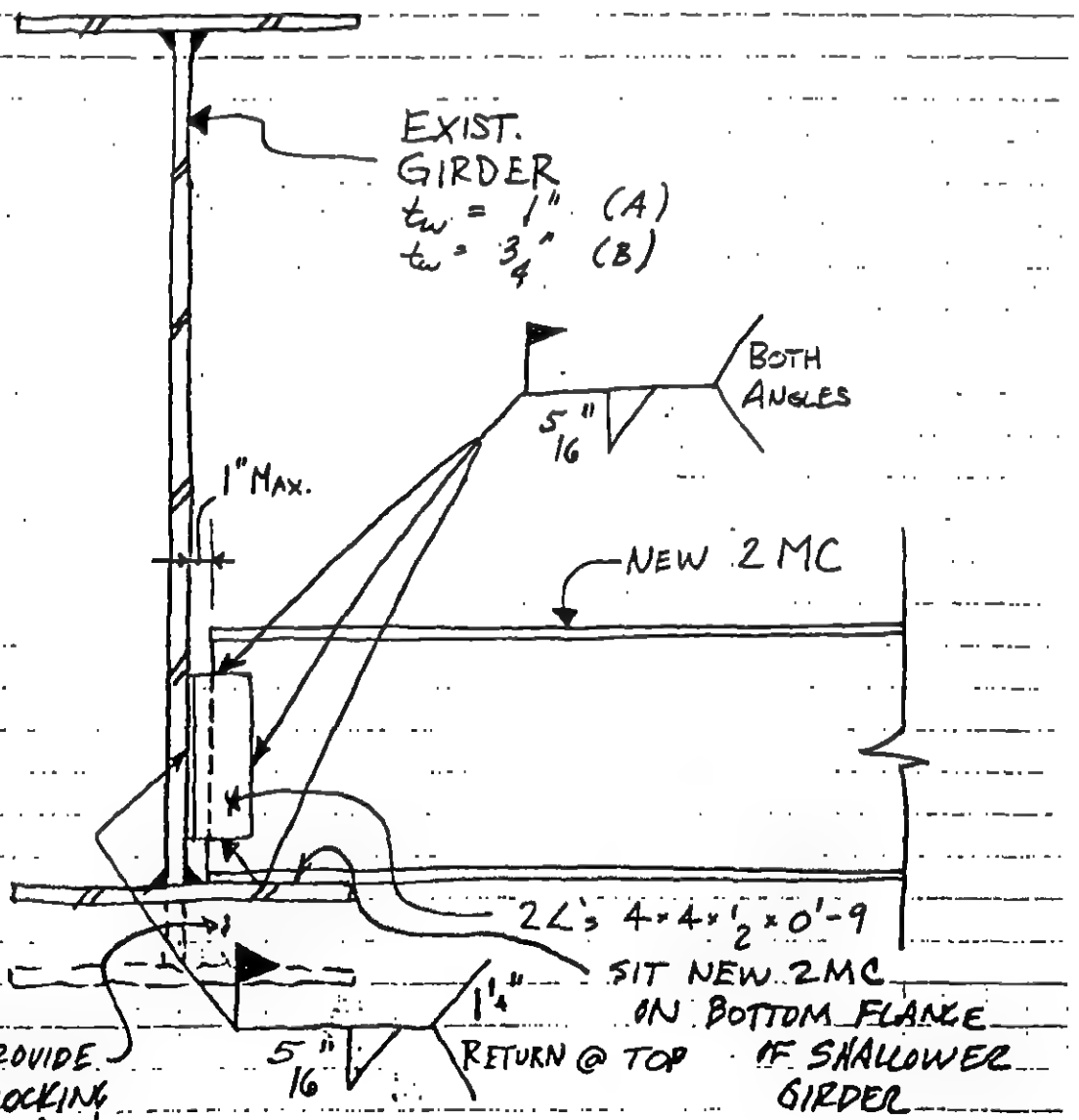

CONFIDENTIAL

EXP 003818

REV.	LERA LESLIE E. ROBERTSON ASSOCIATES CONSULTING STRUCTURAL ENGINEERS	P 1003118	DRAWING NO.
	WTC – EXPLOSION	DRAFT	SH-SK-14.3
	TYPICAL BRACING CONNECTION	DESIGN CG	
		CHECK	1 SEP 93

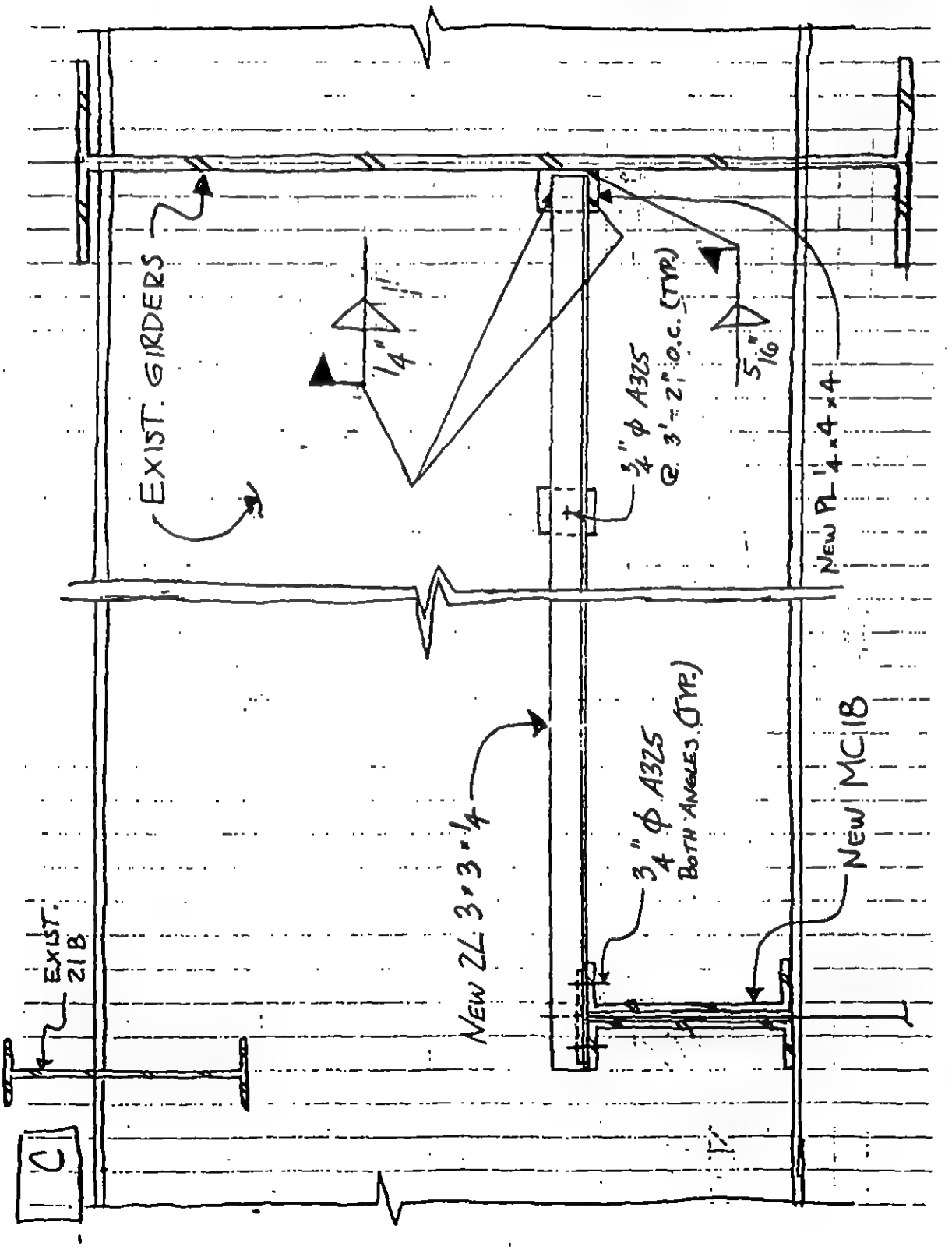

CONFIDENTIAL

EXP 003819

REV.	LERA LESLIE E. ROBERTSON ASSOCIATES CONSULTING STRUCTURAL ENGINEERS	P 1003118	DRAWING NO.
	WTC - EXPLOSION	DRAFT	SH-SK-14.4
	TYPICAL HANGER SUPPORT DETAIL	DESIGN CG	
		CHECK	1 SEP 93

D

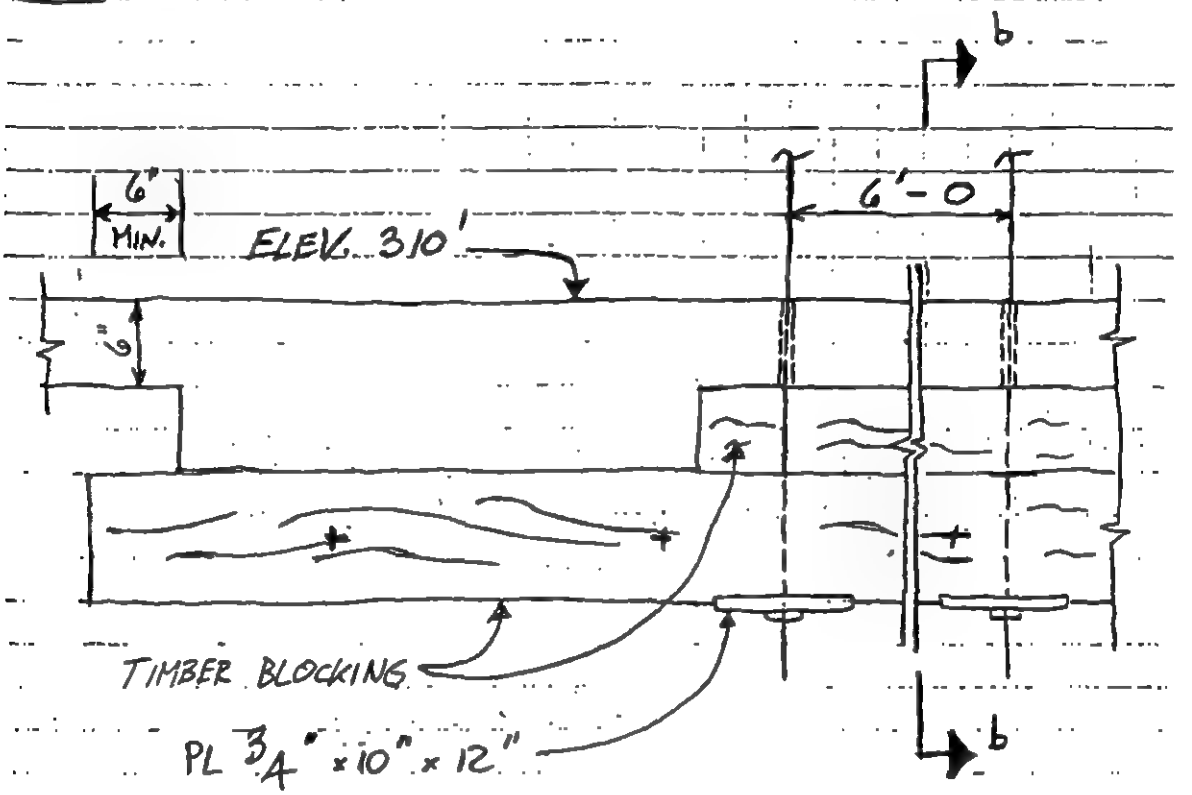

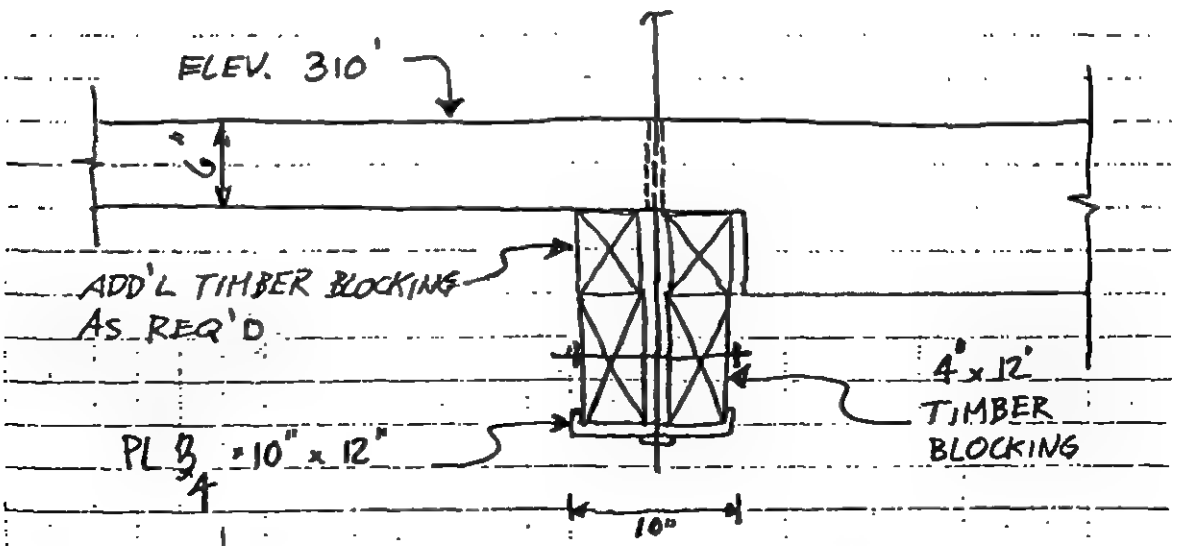

SECTION b-b

REV.	LERA LESLIE E. ROBERTSON ASSOCIATES CONSULTING STRUCTURAL ENGINEERS	P/003118	DRAWING NO.
A NOV 93	WTC - RECONSTRUCTION	DRAFT WPM	SH-SK-15.1
	B6 SHORING - REFRIGERATION PLANT MOTOR REPLACEMENT	DESIGN WPM	
		CHECK	9.23.93

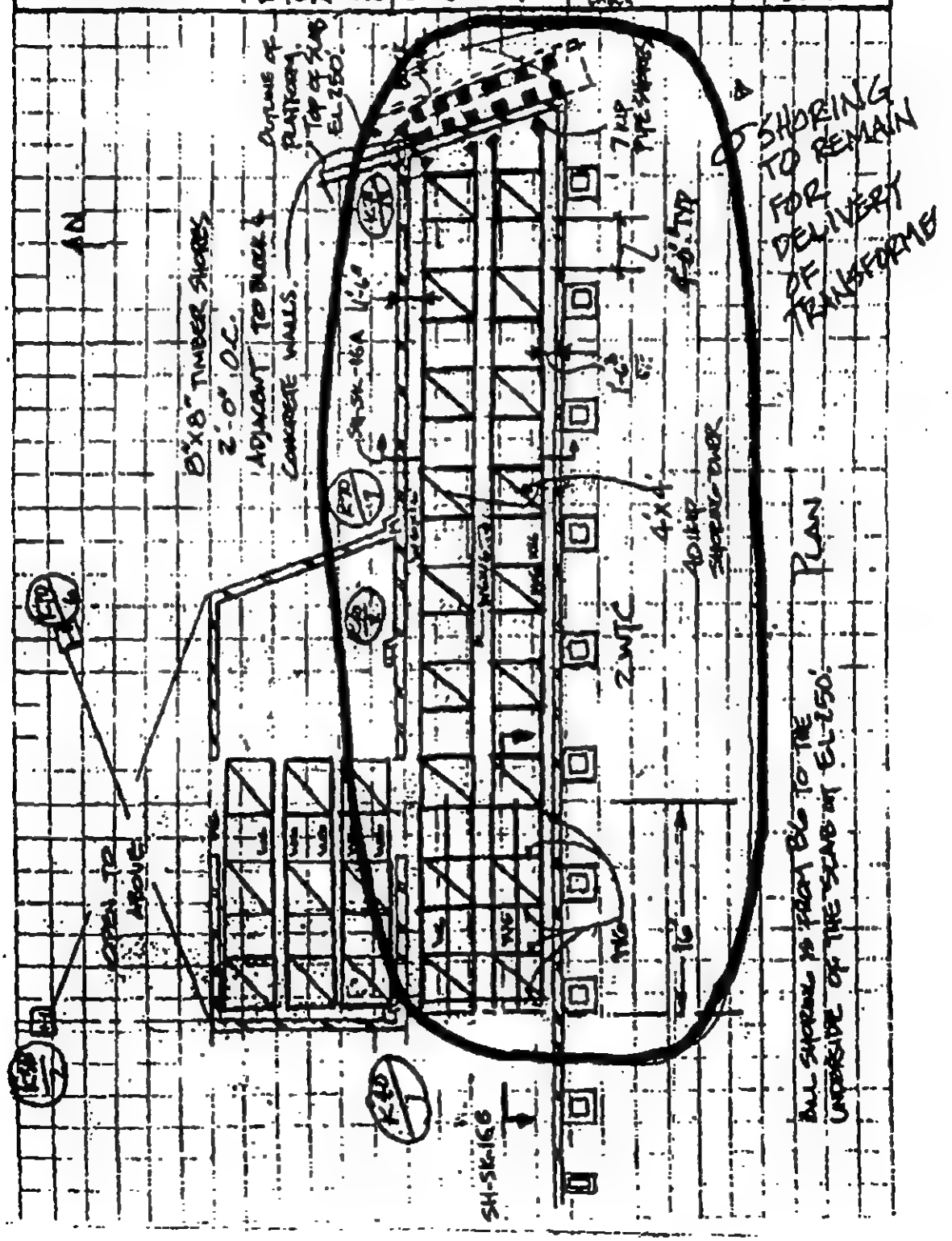

CONFIDENTIAL

REV.	LERA LESLIE E. ROBERTSON ASSOCIATES CONSULTING STRUCTURAL ENGINEERS	P 1003118	DRAWING NO.
	WTC-RECONSTRUCTION	DRAFT WPM	SH-SK-152
	B6 SHORING - REFRIGERATION PLANT MOTOR REPLACEMENT	DESIGN WPM	
		CHECK	9.23.93

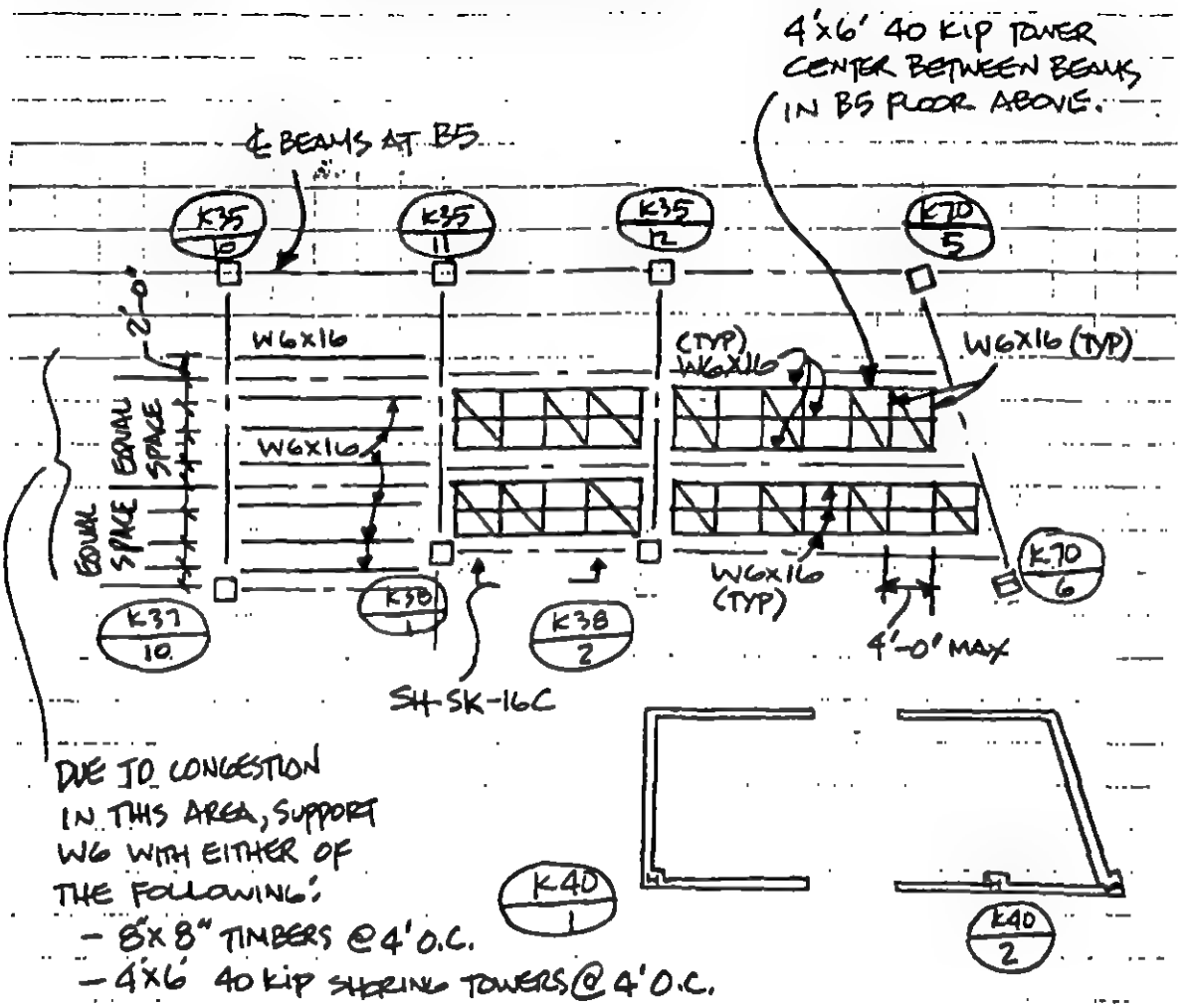

DUE TO CONGESTION IN THIS AREA, SUPPORT W6 WITH EITHER OF THE FOLLOWING:
- 8"x8" TIMBERS @ 4' O.C.
- 4'x6' 40 KIP SHORING TOWERS @ 4' O.C.

SHORING IS FROM B6 TO UNDERSIDE OF REFRIGERATION PLANT FLOOR

CONFIDENTIAL

EXP 003822

REV.	LERA LESLIE E. ROBERTSON ASSOCIATES CONSULTING STRUCTURAL ENGINEERS	P 1003118	DRAWING NO.
	WTC- RECONSTRUCTION	DRAFT WPM	SH-SK-16.1
	B6 SHORING - REFRIGERATION PLANT MOTOR REPLACEMENT	DESIGN WPM	
		CHECK	9.23.93

A

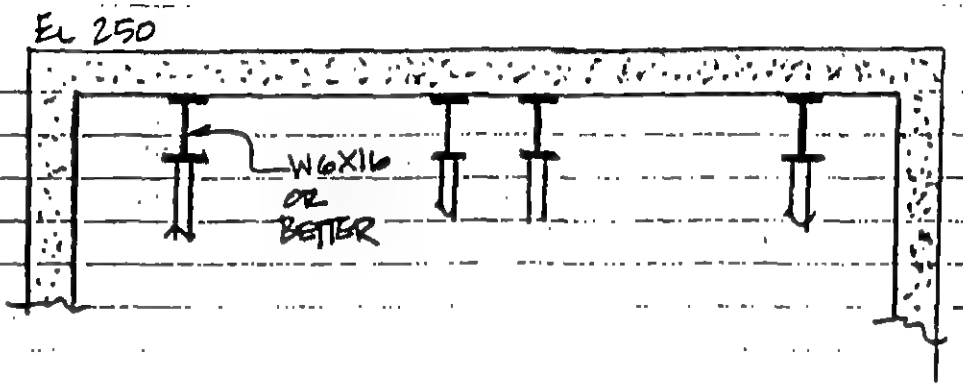

B

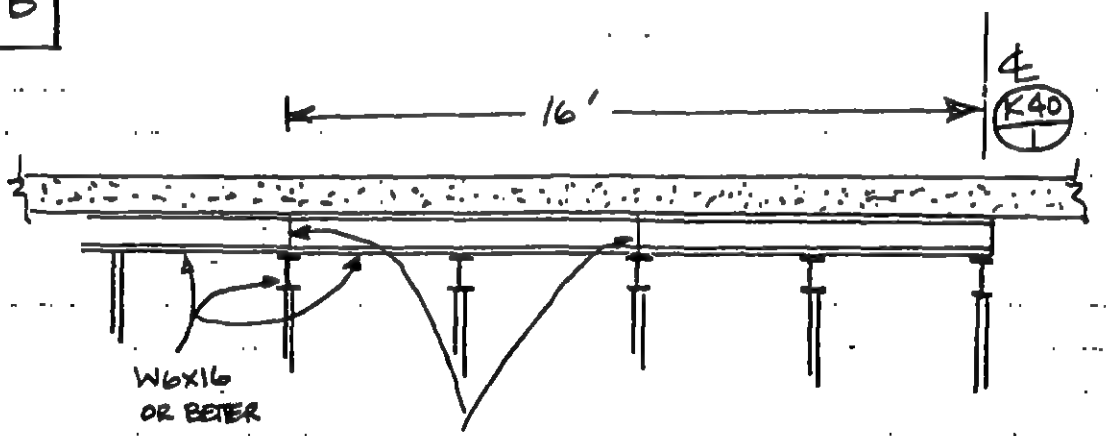

NOTE: BUTT ENDS OF W6's OVER SHORING POSTS OR OTHERWISE SUPPORT. CANTILEVERED SPANS NOT ALLOWED.
LAPPING IS ACCEPTABLE

CONFIDENTIAL

EXP 003823

REV.	LERA LESLIE E. ROBERTSON ASSOCIATES CONSULTING STRUCTURAL ENGINEERS	P 1003118	DRAWING NO.
	WTC - RECONSTRUCTION	DRAFT WPM	
	REFRIGERATION PLANT	DESIGN WPM	SH-SK-16.2
	B6 SHORING - MOTOR REPLACEMENT	CHECK	9.23.93

C

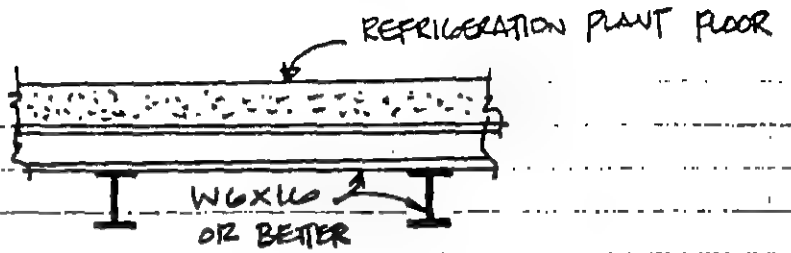

CONFIDENTIAL

REV.	LERA LESLIE E. ROBERTSON ASSOCIATES CONSULTING STRUCTURAL ENGINEERS	P 1003118	DRAWING NO.
17NOV93	WTC EXPLOSION	DRAFT	SH-SK-17.1
		DESIGN WJK	
	B-5 SHORING - MOTOR REPLACEMENT	CHECK	27 SEP 93

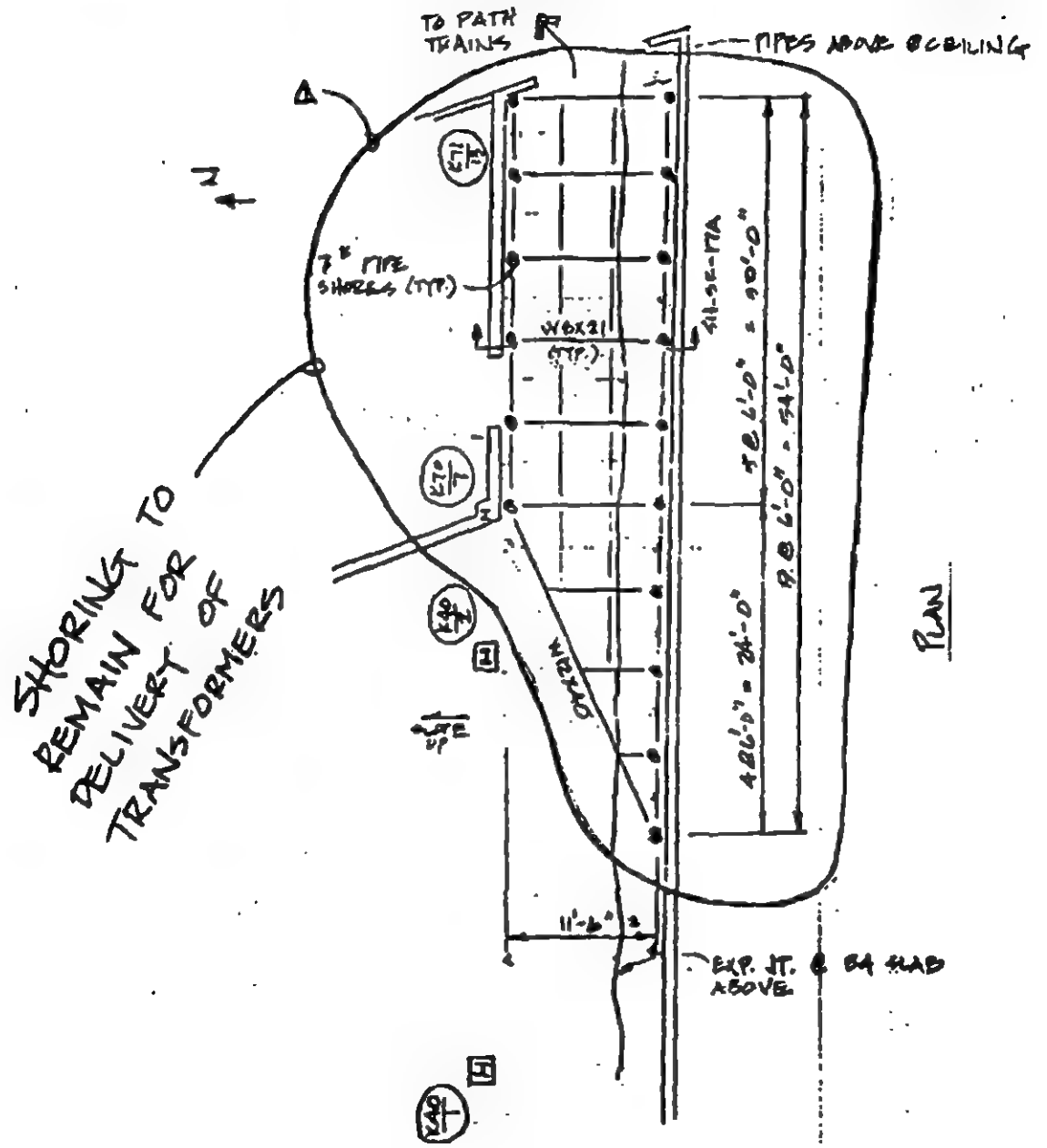

NOTES: ALL SHORING IS FROM B5. TO THE UNDERSIDE OF THE B4 SLAB
U.N.O. 7" SHORING PIPE
ALL WBs SHALL BE LATERALLY BRACED

REV.	LERA LESLIE E. ROBERTSON ASSOCIATES CONSULTING STRUCTURAL ENGINEERS	P 1003118	DRAWING NO.
	WTC EXPLOSION	DRAFT	SH-SK-19
	SHORING PLAN FOR B2 DEMOLITION	DESIGN RBG	
		CHECK	28 OCT 93

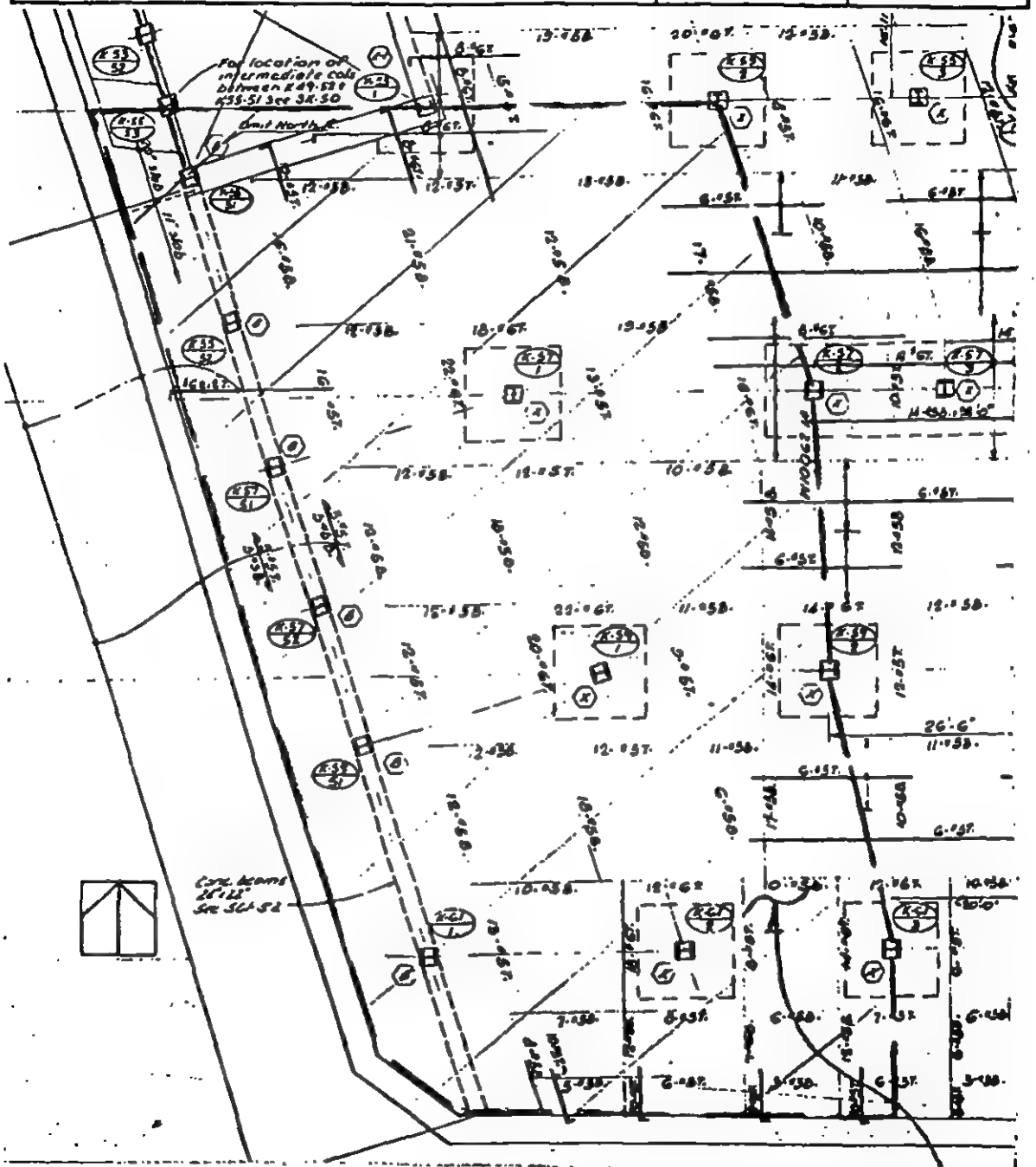

MAINTAIN THIS AREA FREE FROM ANY STORAGE LOADINGS AT B2, B3, AND B4 LEVELS THROUGHOUT THE SHORING, DEMOLITION, AND RECONSTRUCTION OF THE B2 SLAB.

REV.	LERA LESLIE E. ROBERTSON ASSOCIATES CONSULTING STRUCTURAL ENGINEERS	P 1003118	DRAWING NO.
10-29-93 11-01-93	WTC EXPLOSION	DRAFT	SH-SK-20.1
	SHORING PLAN FOR B2 LEVEL AREA (A) DEMOLITION	DESIGN RBG	
		CHECK	28 OCT 93

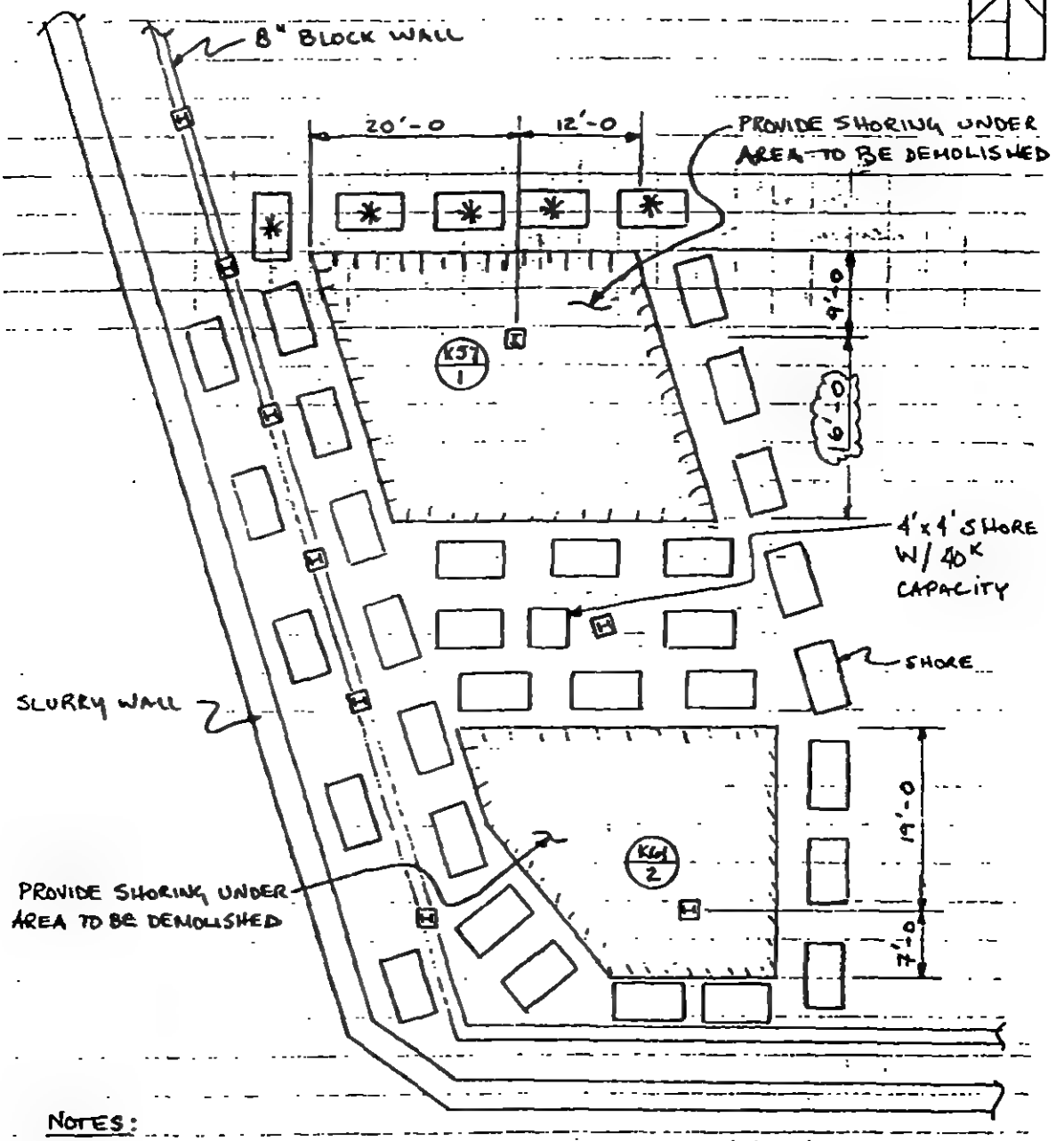

NOTES:

1. PLACE B4 SHORES IMMEDIATELY BELOW B3 SHORES U.O.N.
2. * DENOTES SHORES TO BE OMITTED FROM B4 LEVEL.
3. SHORES TO BE 4'x7' W/ 40K CAPACITY U.O.N.
4. REFER TO DWG. DE-SK-21.1 FOR ADDITIONAL DIMENSIONS.

PART PLAN - B3 AND B4 LEVELS

REV.	LERA LESLIE E. ROBERTSON ASSOCIATES CONSULTING STRUCTURAL ENGINEERS	P 1003118	DRAWING NO.
11-1-93	WTC EXPLOSION	DRAFT	SH-SK-202
	SHORING PLAN - FOR B2 LEVEL AREA (B) DEMOLITION	DESIGN RBG	
		CHECK	28 OCT 93

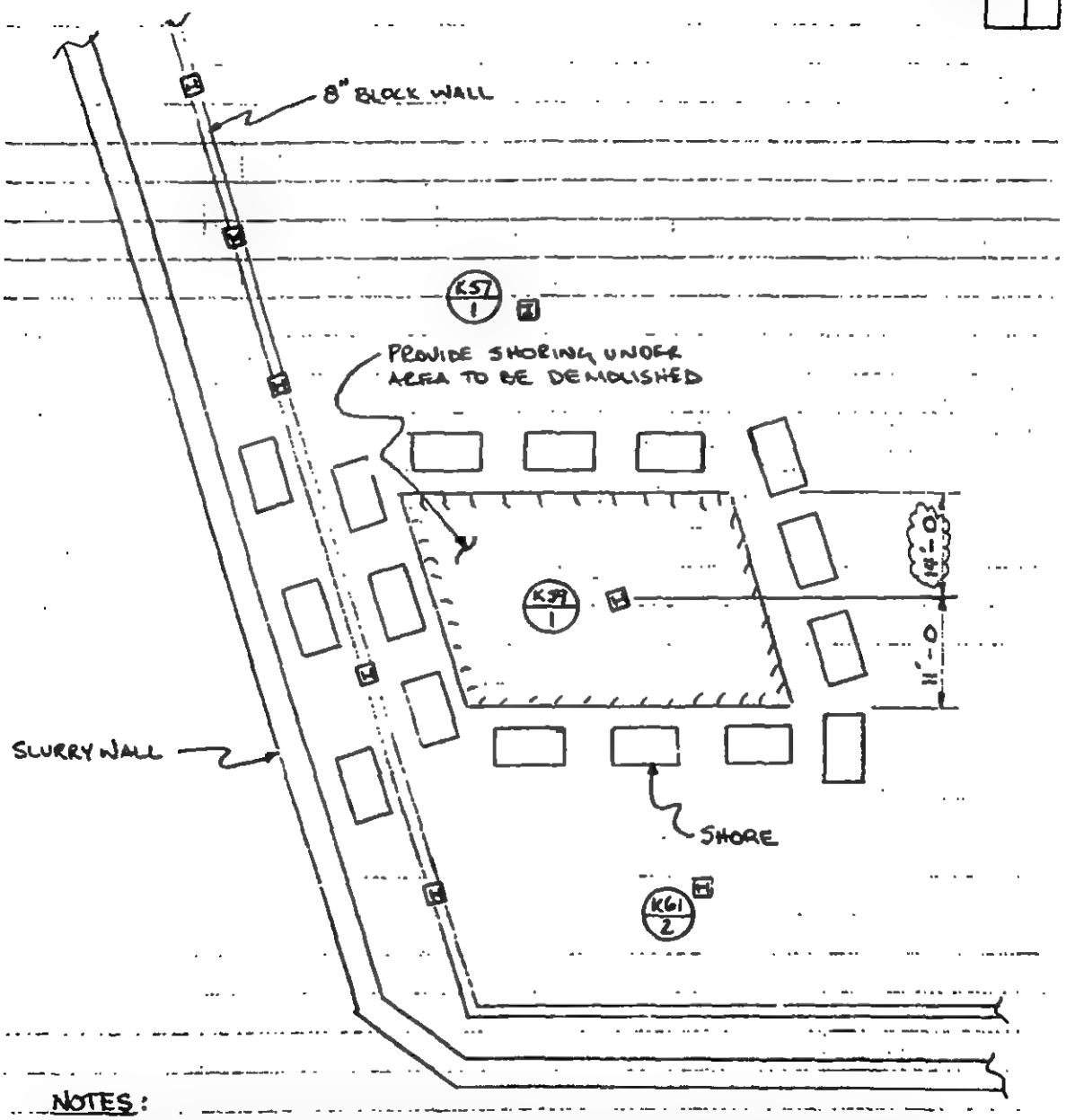

NOTES:

1. PLACE B4 SHORES IMMEDIATELY BELOW B3 SHORES U.O.N.
2. SHORES TO BE 4"x7" W/ 40K CAPACITY U.O.N.
3. REFER TO DWG. DE-SK-21.1 FOR ADDITIONAL DIMENSIONS.

PART PLAN - B3 AND B4 LEVELS

CONFIDENTIAL

EXP 003828

REV.	LERA LESLIE E. ROBERTSON ASSOCIATES CONSULTING STRUCTURAL ENGINEERS	P 1003118	DRAWING NO.
	WTC - EXPLOSION	DRAFT	SH-SK-21.1
	SHORING PLAN FOR DEMOLITION OF B1 LEVEL, COL.'S K47/1 & K47/2	DESIGN IB	
		CHECK	10/28/93

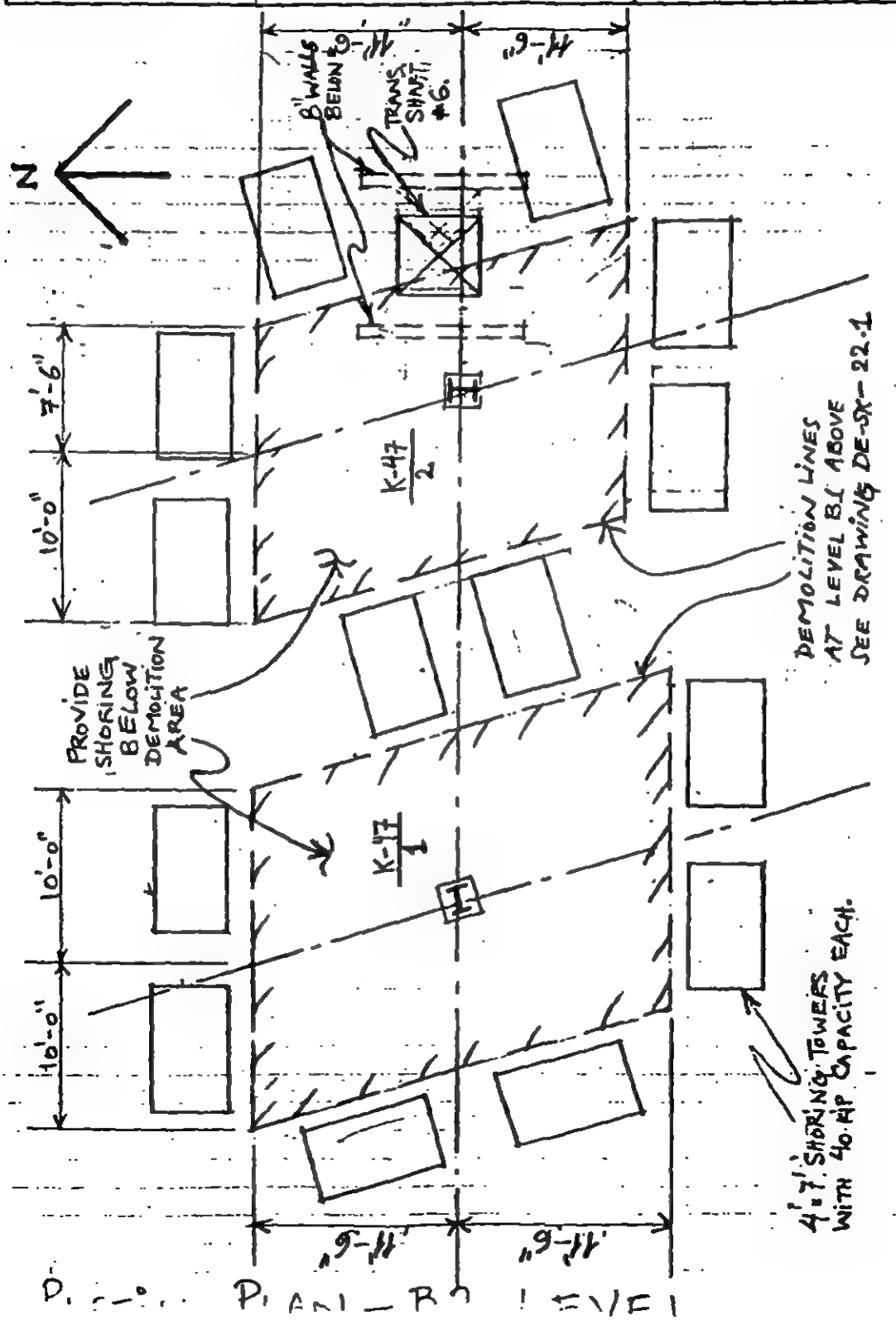

D... PLAN - B1 LEVEL

CONFIDENTIAL

EXP 003829

REV.	LERA LESLIE E. ROBERTSON ASSOCIATES CONSULTING STRUCTURAL ENGINEERS	P 1003118	DRAWING NO.
	WTC - EXPLOSION	DRAFT	SH-SK-21.2
	SHORING PLAN FOR DEMOLITION OF B1 LEVEL, COL.'S K47/1 & K47/2	DESIGN IB	
		CHECK	10/28/93

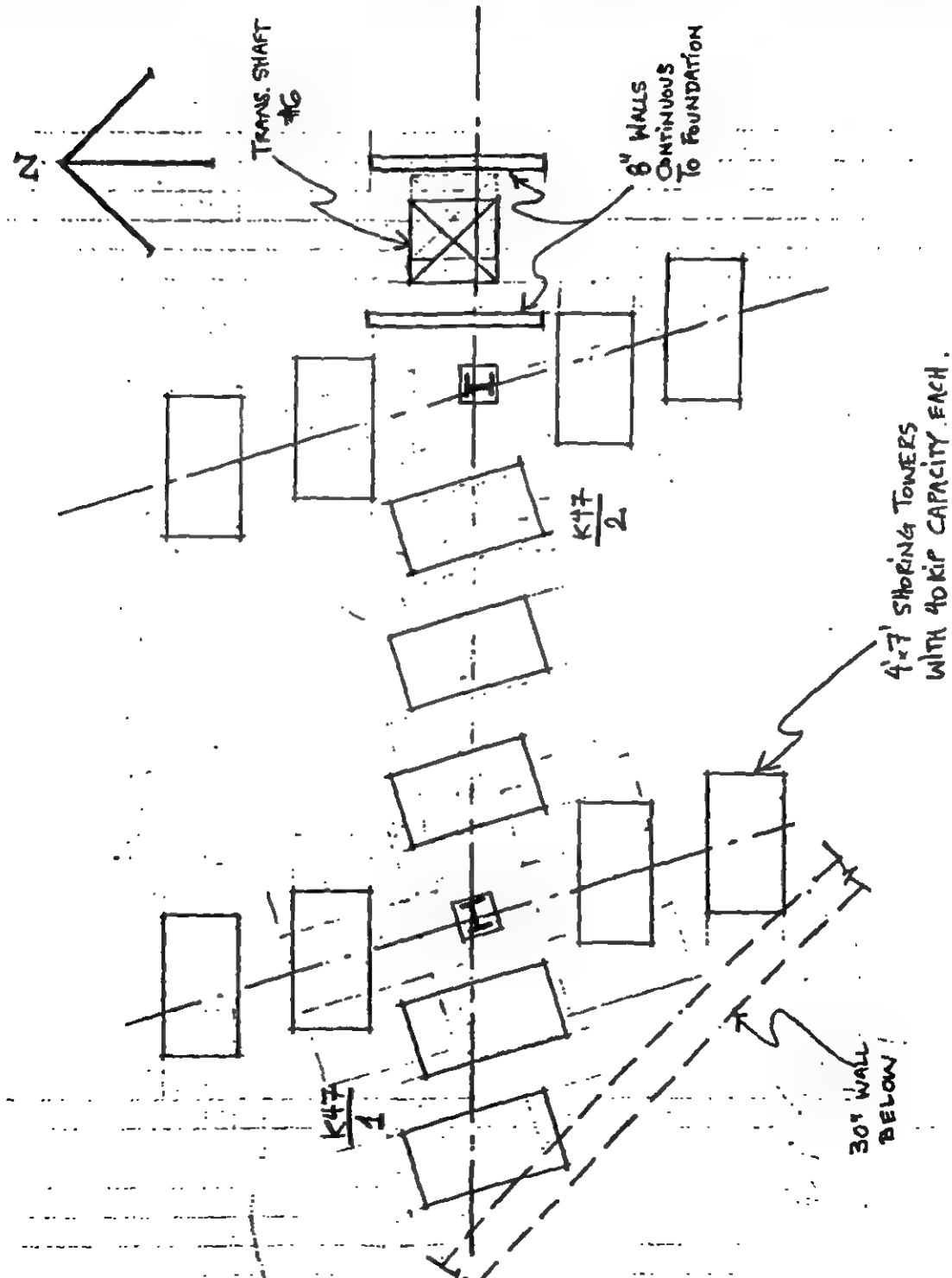

PARTIAL PLAN - B3 LEVEL

CONFIDENTIAL

EXP 003830

REV.	LERA LESLIE E. ROBERTSON ASSOCIATES CONSULTING STRUCTURAL ENGINEERS	P 100 3118	DRAWING NO.
	WTC - EXPLOSION	DRAFT	SH-SK-213
	SHORING PLAN FOR DEMOLITION	DESIGN IB	
	OF B1 LEVEL, COL.'S K47/1 & K47/2	CHECK	10/28/93

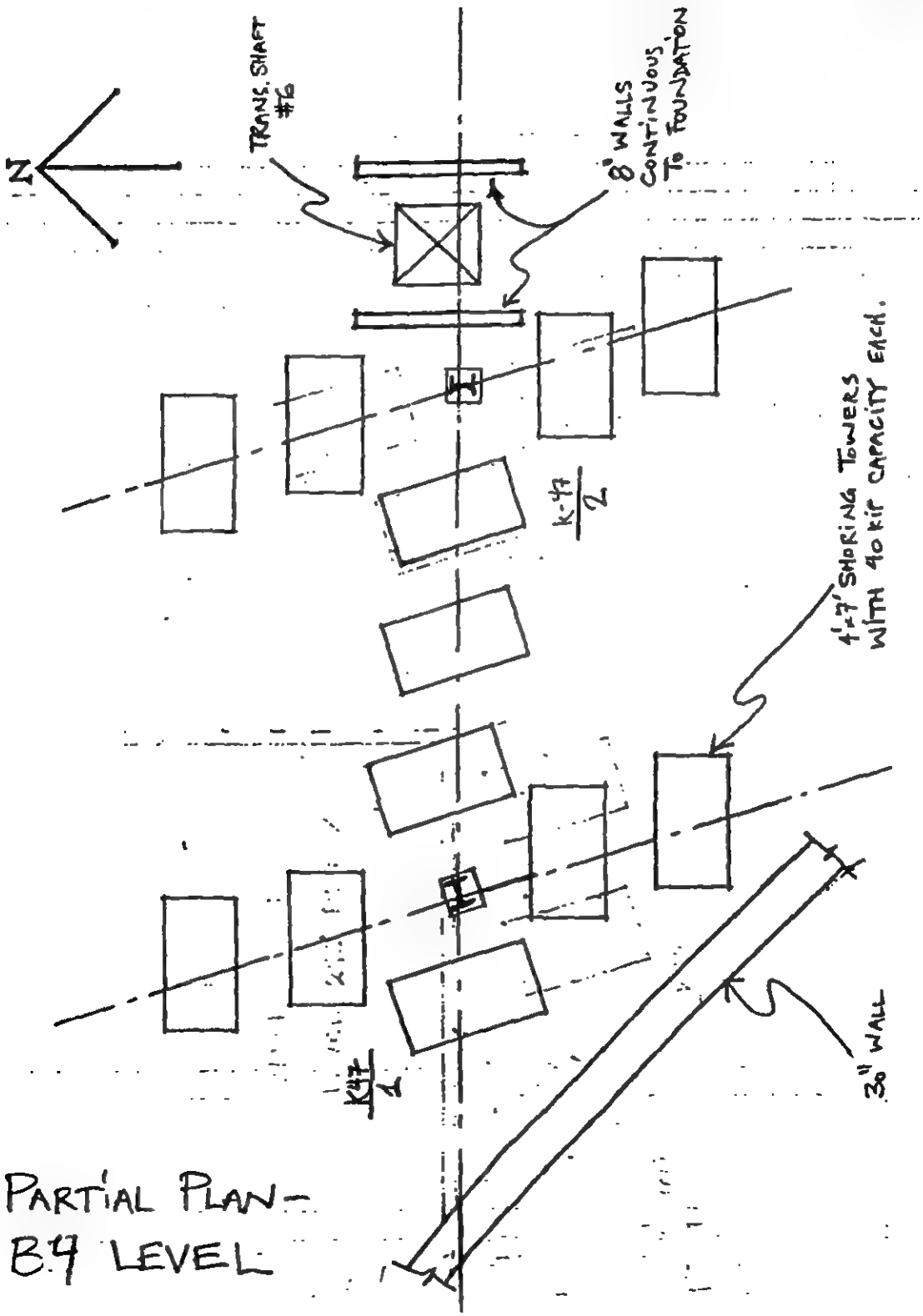

PARTIAL PLAN - B4 LEVEL

CONFIDENTIAL

EXP 003831

REV.	LERA LESLIE E. ROBERTSON ASSOCIATES CONSULTING STRUCTURAL ENGINEERS	P 1003118	DRAWING NO.
1/17/94	WTC EXPLOSION	DRAFT WT/RDG	
3/23/94	B 2 LEVEL	DESIGN WT/RDG	SH-SK-22
	RAMP 'T' — SHORING PLAN	CHECK	11-8-93

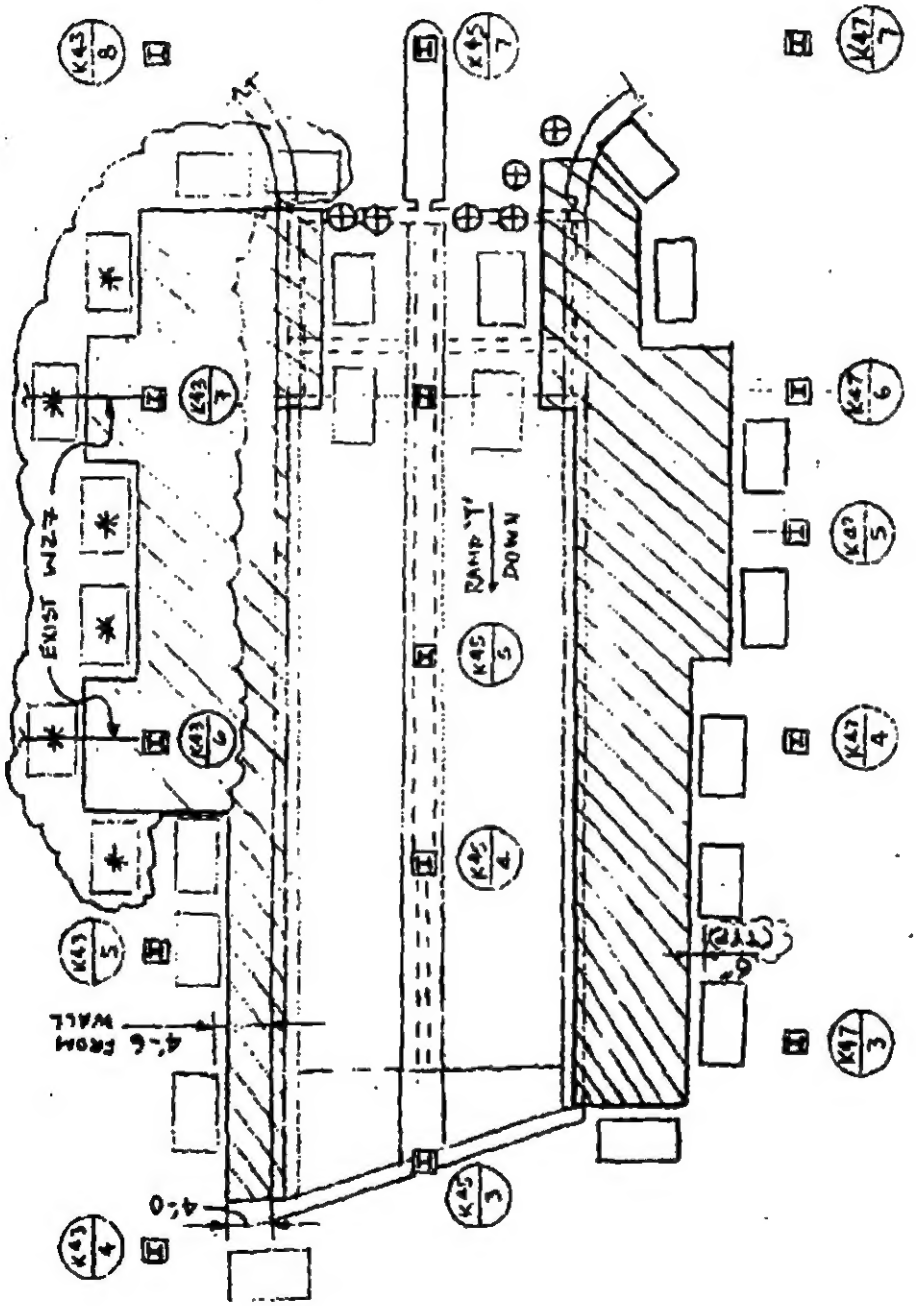

PLAN

NOTES: 1. SHORE FROM B3 TO B2 OR FROM B3 TO RAMP UNLESS OTHERWISE NOTED.

2. SHORING TOWER IS 7'x4' WITH CAPACITY OF 40 KIPS.

3. ⊕ — PIPE SHORE WITH CAPACITY OF 7 KIPS.

4. * — DENOTES SHORE FROM B4 LEVEL TO B2 LEVEL.

REV.	LERA LESLIE E. ROBERTSON ASSOCIATES CONSULTING STRUCTURAL ENGINEERS	P100-118	DRAWING NO.
	WTC EXPLOSION	DRAFT WJK	SH-SK-23
	SHORING ON B6 FOR B5 LEVEL TRANSFORMER REPLACEMENT	DESIGN WJK	
		CHECK	16 NOV 93

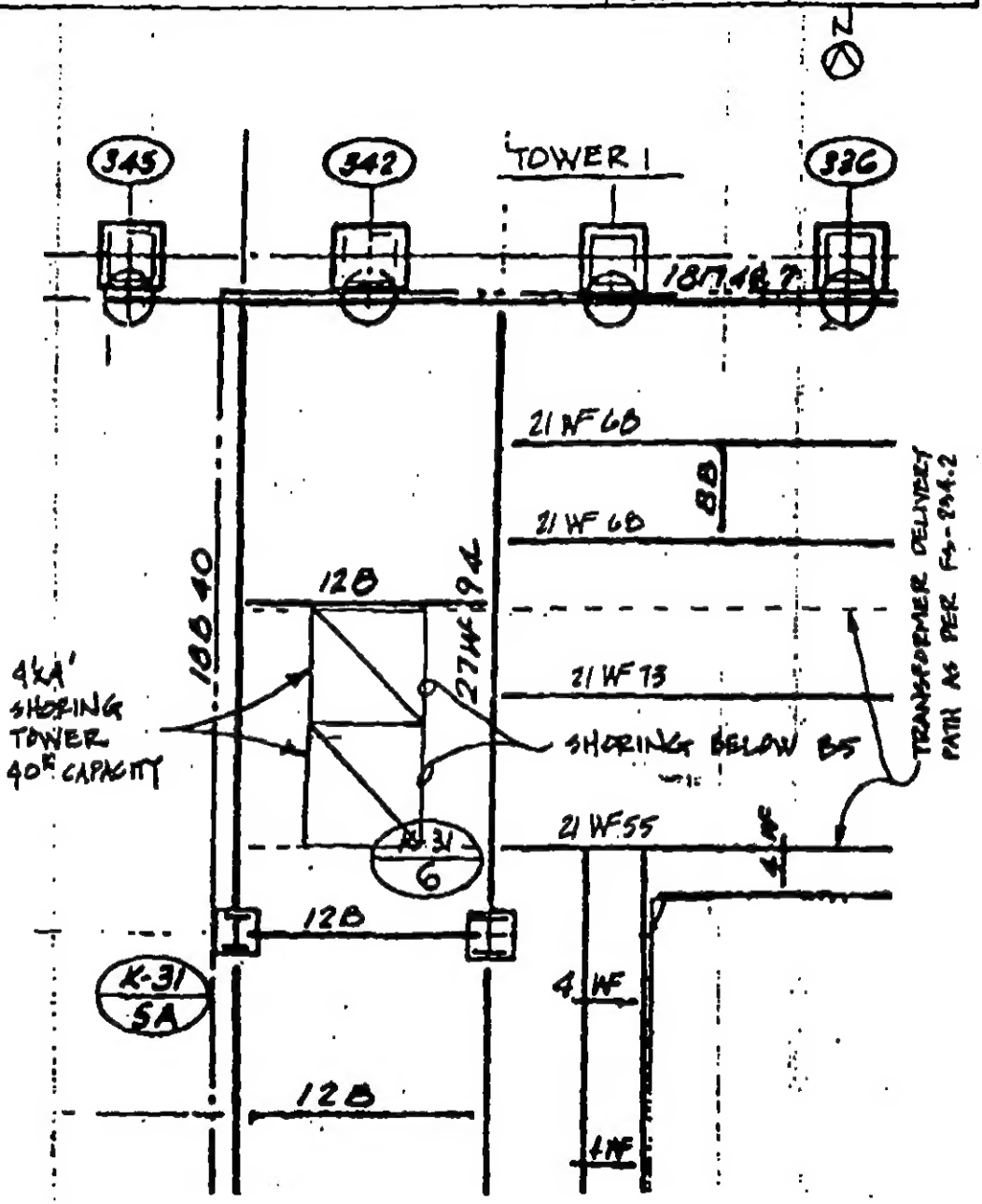

PLAN - B5 LEVEL FRAMING

ONFIDENTIAL

REV.	LERA LESLIE E. ROBERTSON ASSOCIATES CONSULTING STRUCTURAL ENGINEERS	P 1103915	DRAWING NO.
	WTC EXPLOSION	DRAFT	SK-10.6
	MARBLE PANEL REPAIR	DESIGN	
		CHECK WJF	

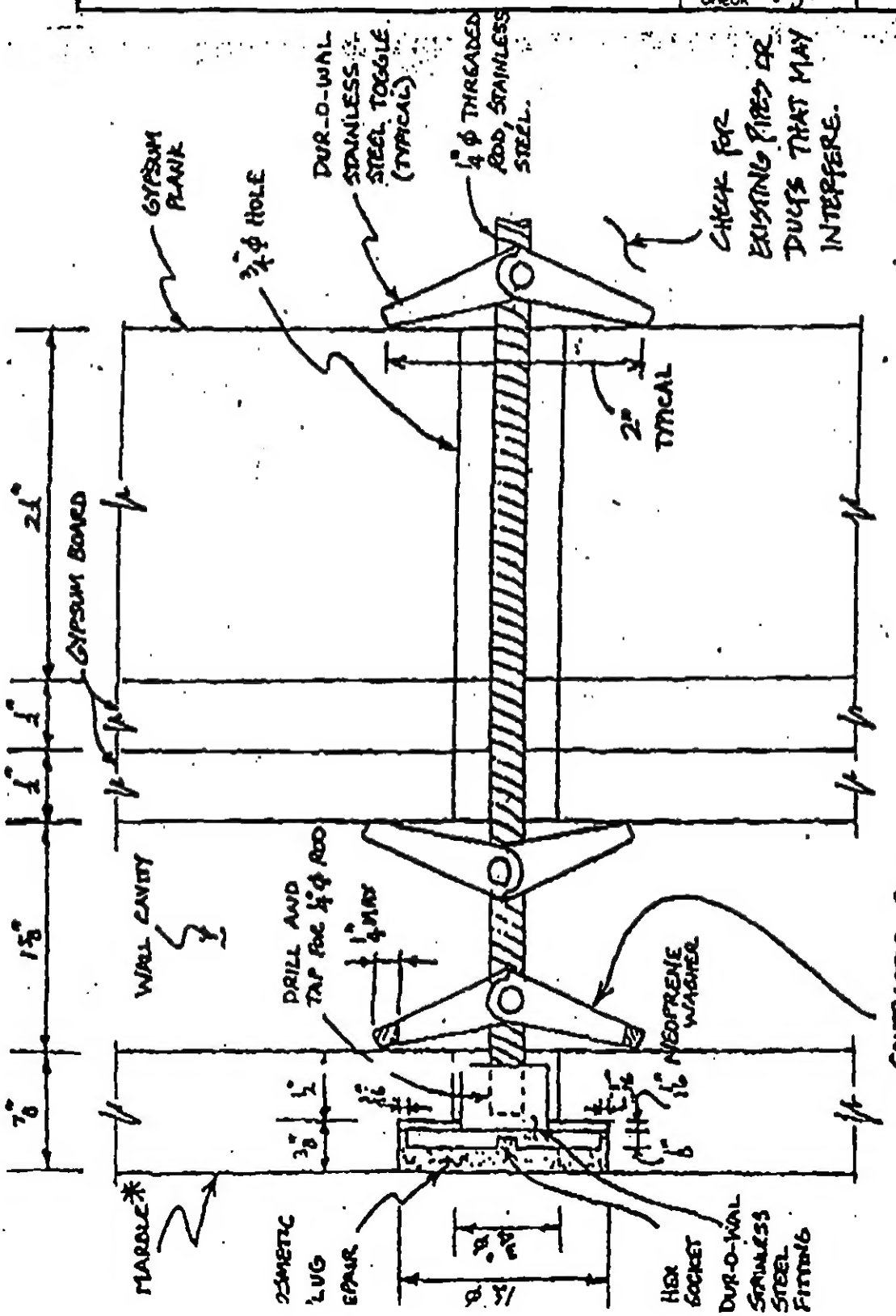

* CORE MARBLE USING DIAMOND OR ACCEPTABLE CARBIDE BIT.

GYPSUM, ANCHOR DETAIL

CONFIDENTIAL